Contents

EN

1. *Safety and operating instructions* _____ 2
1. *Installation and hook-up* _____ 7
2. *Description of the controls* _____ 9
3. *Operating instructions* _____ 19
4. *Cleaning and maintenance* _____ 27
5. *Troubleshooting* _____ 41

Thank you for choosing one of our products.
You are advised to read this manual carefully; it contains all the information you need about the right conditions for the proper, safe use of your dishwasher.
The individual sections are laid out to provide you with a step-by-step guide to all your appliance's functions; the texts are easy to understand and are complete with detailed illustrations.
Recommendations are given for the correct use of the baskets, spray arms, containers, filters, washing programs, and for operating the controls.
Following the cleaning instructions provided here will keep your dishwasher's performance at peak levels in the long term.
This user-friendly manual will provide answers to all your questions about the use of the dishwasher.

INSTALLATION INSTRUCTIONS: these are intended for the ***qualified technician*** *who must carry out the installation, hook-up and testing of the appliance.*

USER INSTRUCTIONS: these consist of recommendations for using the appliance, a description of its controls and of the correct cleaning and maintenance procedures.

1. Safety and operating instructions

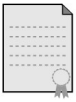

THIS MANUAL FORMS AN INTEGRAL PART OF THE APPLIANCE; IT MUST ALWAYS BE KEPT INTACT TOGETHER WITH THE DISHWASHER FOR FUTIRE REFERENCE. BEFORE USING THE APPLIANCE, CAREFULLY READ ALL THE INSTRUCTIONS CONTAINED IN THIS MANUAL. THEY CONTAIN IMPORTANT INFORMATION FOR THE INSTALLATION, USE AND MAINTENANCE OF THE APPLIANCE. IN THE EVENT OF SALE OR TRANSFER, ENSURE THAT THE MANUAL ALWAYS ACCOMPANIES THE APPLIANCE.

THIS APPLIANCE IS INTENDED TO BE USED IN HOUSEHOLD AND SIMILAR APPLICATIONS SUCH AS:
- STAFF KITCHEN AREAS IN SHOPS, OFFICES AND OTHER WORKING ENVIRONMENTS;
- FARM HOUSES;
- BY CLIENTS IN HOTELS, MOTELS AND OTHER RESIDENTIAL TYPE ENVIRONMENTS;
- BED AND BREAKFAST TYPE ENVIRONMENTS

THIS APPLIANCE IS DESIGNED TO BE USED ONLY IN STATIONARY LOCATIONS.

THIS APPLIANCE COMPLIES WITH **DIRECTIVES 2006/95/EC AND 2004/108/EC** CURRENTLY IN FORCE, INCLUDING THE PREVENTION AND ELIMINATION OF RADIO FREQUENCY INTERFERENCE AND IS DESIGNED FOR THE FOLLOWING PURPOSE: **WASHING AND DRYING OF DISHES;** ANY OTHER USE SHALL BE CONSIDERED IMPROPER. THE MANUFACTURER DECLINES ALL RESPONSIBILITY FOR USES OTHER THAN THOSE DESCRIBED ABOVE.

DO NOT USE APPLIANCES WHICH HAVE BEEN DAMAGED DURING TRANSIT! IF IN DOUBT, CONSULT YOUR DEALER.

THE APPLIANCE MUST BE INSTALLED AND CONNECTED IN ACCORDANCE WITH THE INSTRUCTIONS PROVIDED BY THE MANUFACTURER. INSTALLATION MUST BE PERFORMED BY A QUALIFIED TECHNICIAN, IN COMPLIANCE WITH THE REGULATIONS IN FORCE.

DO NOT LEAVE THE DISCARDED PACKAGING MATERIALS UNSUPERVISED WITHIN THE HOME. DO NOT ALLOW CHILDREN TO PLAY WITH PACKAGING MATERIALS. SEPARATE THE VARIOUS MATERIALS WHICH MAKE UP THE PACKAGING AND TAKE THEM TO THE NEAREST SORTED WASTE COLLECTION CENTRE.

THE NAME PLATE FEATURING THE TECHNICAL DATA, SERIAL NUMBER AND MARKINGS IS VISIBLY POSITIONED ON THE INNER EDGE OF THE DOOR. **THE NAME PLATE MUST NEVER BE REMOVED.**

THE APPLIANCE MUST BE PROVIDED WITH AN EARTH CONNECTION IN ACCORDANCE WITH THE ELECTRICAL SAFETY REGULATIONS IN FORCE.

THE MANUFACTURER DECLINES ALL RESPONSIBILITY FOR DAMAGE TO PERSONS OR PROPERTY RESULTING FROM THE FAILURE TO EARTH THE APPLIANCE OR FROM A DEFECTIVE EARTH CONNECTION.

DURING THE INSTALLATION THE APPLIANCE MUST BE DISCONNECTED FROM THE NETWORK..

DO NOT INSTALL THE APPLIANCE IN A PLACE SUBJECT TO FREEZING.

IF THE APPLIANCE IS INSTALLED ON A CARPET FLOOR, TAKE CARE THAT THE OPENINGS IN ITS BASE ARE NOT OBSTRUCTED.

DO NOT INSTALL THE APPLIANCE NEAR EQUIPMENT WITH HIGH IRRADIATION TEMPERATURES (EG. GAS BURNERS, FIREPLACES, ETC.) AS THEY MAY CAUSE DAMAGE.

IF THE APPLIANCE IS INSTALLED IN A COMPARTMENT ABOVE OR BELOW ANOTHER EQUIPMENT (EG. GAS BURNERS, OVENS, ETC.), READ CAREFULLY THE INSTRUCTIONS PROVIDED BY THE MANUFACTURER OF THE EQUIPMENT. IF THE INSTRUCTIONS OF THE EQUIPMENT DO NOT CONTAIN INFORMATION, CONTACT THE MANUFACTURER OF THE EQUIPMENT TO ENSURE THAT THE APPLIANCE CAN BE INSTALLED ABOVE OR BELOW IT.

BUILDING-IN THE APPLIANCE UNDERNEATH A HOB IS ABSOLUTELY FORBIDDEN.
INSTALL A HOB ON TOP OF A FREE-STANDING APPLIANCE IS ABSOLUTELY FORBIDDEN.

TO ENSURE STABILITY, INSTALL THE APPLIANCE ONLY UNDER CONTINUOUS WORKTOP, SECURELY FIXED TO ADJACENT CABINETS. IF THE APPLIANCE IS INSTALLED IN A HIGH CABINET BOTH, THE APPLIANCE AND THE CABINET, MUST BE ADEQUATELY FIXED.

IF THE APPLIANCE IS NOT BUILT-IN AND IS THEREFORE ACCESSIBLE ON ONE SIDE, THE DOOR HINGE AREA MUST BE COVERED FOR SAFETY REASON (INJURY HAZARD). THE COVERING FIXTURES ARE AVAILABLE AS AN ACCESSORY FROM SPECIALIST DEALERS OR THE AFTER-SALES.

CHECK THAT THE VOLTAGE AND THE FREQUENCY OF THE MAINS MATCH THE RATINGS ON THE NAME PLATE OF THE APPLIANCE.

THE PLUG ON THE SUPPLY CORD AND THE CORRESPONDING SOCKET OUTLET MUST BE OF THE SAME TYPE AND MEET THE REGULATION IN FORCE.
DO NOT USE ADAPTORS OR SHUNT CONNECTIONS IN ORDER TO AVOID THE POSSIBILITY OF OVERHEATING OR BURNING.

THE PLUG OF THE APPLIANCE MUST BE ACCESSIBLE AFTER INSTALLATION.
NEVER DISCONNECT THE PLUG BY PULLING ON THE POWER CORD.

IF THE APPLIANCE IS PROVIDED WITH A PLUGLESS SUPPLY CORD, A CIRCUIT BREAKER PROVIDING A FULL DISCONNECTION IN OVERVOLTAGE

Installation instructions

PROTECTION CLASS III MUST BE INSTALLED IN AN EASILY ACCESSIBLE POSITION ON THE SUPPLY LINE.

THE DISHWASHER MUST ALWAYS BE CONNECTED TO THE WATER SYSTEM USING NEW HOSE SETS.

IMMEDIATELY AFTER INSTALLING THE DISHWASHER, PERFORM A QUICK TEST OF THE APPLIANCE. IF THE DISHWASHER FAILS TO OPERATE CORRECTLY, DISCONNECT IT FROM THE ELECTRICAL POWER SUPPLY AND CALL THE NEAREST TECHNICAL SERVICE CENTRE. **DO NOT ATTEMPT TO REPAIR THE APPLIANCE.**

THE APPLIANCE IS NOT INTENDED FOR USE BY PERSONS (INCLUDING CHILDREN) WITH REDUCED PHYSICAL, SENSORY OR MENTAL CAPABILITIES, OR LACK OF EXPERIENCE AND KNOWLEDGE, UNLESS THEY HAVE BEEN GIVEN SUPERVISED OR INSTRUCTION CONCERNING USE OF THE APPLIANCE BY A RESPONSIBLE PERSON FOR THEIR SAFETY.

YOUNG CHILDREN SHOULD BE SUPERVISED TO ENSURE THAT THEY DO NOT PLAY WITH THE APPLIANCE.

WARNING: SOME DISHWASHER DETERGENTS ARE STRONGLY ALKALINE. THEY CAN BE EXTREMELY DANGEROUS IF SWALLOWED. AVOID CONTACT WITH SKIN AND EYES AND KEEP CHILDREN AWAY FROM THE DISHWASHER WHEN THE DOOR IS OPEN.

KEEP CHILDREN AWAY FROM THE DISHWASHER WHEN THE DOOR IS OPEN. ALWAYS CHECK THAT THE DETERGENT RECEPTACLE IS EMPTY AFTER COMPLETION OF THE WASH CYCLE.

DO NOT DRINK THE WATER RESIDUES WHICH MAY BE PRESENT INSIDE THE DISHES OR APPLIANCE AT THE END OF THE WASHING PROGRAM.

DO NOT INTRODUCE SOLVENTS SUCH AS ALCOHOL OR TURPENTINE IN THE APPLIANCE, AS THIS MAY CAUSE AN EXPLOSION.

DO NOT LOAD DISHES THAT ARE SOILED WITH ASH, WAX OR PAINT.

PLEASE DO NOT LEAVE THE DOOR OPEN AS THIS WILL CAUSE A TRIPPING HAZARD.

WARNING: KNIVES AND OTHER UTENSILS WITH SHARPS POINTS MUST BE LOADED IN THE BASKET WITH THE POINTS DOWN OR PLACED IN A HORIZONTAL POSITION.

THE DISHWASHER MEETS ALL THE REQUIREMENTS SET OUT BY THE REGULATIONS IN FORCE CONCERNING SAFETY AND ELECTRICAL EQUIPMENT. ANY TECHNICAL CHECKS SHOULD BE CONDUCTED EXCLUSIVELY BY TRAINED AND AUTHORISED TECHNICIANS: **REPAIRS CARRIED OUT BY UNAUTHORISED PERSONS WILL VOID THE WARRANTY, AS WELL AS POSING A POTENTIAL HAZARD TO THE USER.**

IN THE EVENT OF A FAULT, DISCONNECT THE DISHWASHER FROM THE ELECTRICAL POWER SUPPLY AND SHUT OFF THE WATER TAP.

IF THE SUPPLY CORD IS DAMAGED, IT MUST BE REPLACED BY THE MANUFACTURER OR ITS SERVICE AGENT OR A SIMILARLY QUALIFIED PERSON IN ORDER TO AVOID HAZARD.

SOME COMPONENTS ARE LIVE EVEN WITH THE ON/OFF BUTTON IN THE OFF POSITION. BEFORE MAINTENANCE WORK ON THE APPLIANCE, DISCONNECT THE PLUG OR TURN OFF THE MAINS SWITCH IN THE FIXED WIRING

CLEANING AND REGULAR MAINTENANCE OF THE APPLIANCE BY CHILDREN IS ONLY PERMITTED UNDER THE SUPERVISION OF A PERSON RESPONSIBLE FOR THEIR SAFETY.

DO NOT USE STEAM CLEANERS TO CLEAN THE DISHWASHER.

MODELS WITH “AQUASTOP” DEVICE
THE “AQUASTOP” DEVICE PREVENTS FLOODING IN THE EVENT OF A WATER LEAK. WHEN THE “AQUASTOP” DEVICE IS TRIPPED, CALL IN A QUALIFIED TECHNICIAN TO IDENTIFY AND REPAIR THE FAULT.
INSIDE THE “AQUASTOP” WATER INTAKE HOSE, THERE ARE ELECTRICAL PARTS. **DO NOT CUT THE HOSE AND DO NOT ALLOW THE “AQUASTOP” DEVICE TO DROP INTO WATER.** IN THE EVENT OF DAMAGE TO THE “AQUASTOP” WATER INTAKE HOSE, DISCONNECT THE APPLIANCE FROM THE ELECTRICAL SUPPLY AND FROM THE WATER SUPPLY.

MODELS WITH INTERNAL LIGHTING
THE LIGHTING SYSTEM OF THE APPLIANCE BELONGS TO RISK GROUP 1 UNDER THE IEC/EN 62471 STANDARD. THIS MEANS THAT THERE IS NO PHOTOBIOLOGICAL RISK IN NORMAL CONDITIONS OF USE.

IN ACCORDANCE TO ART. 26 OF THE LEGISLATIVE DECREE 14 MARCH 2014, NR. 49 “IMPLEMENTATION OF THE DIRECTIVE 2012/19/EU ON WASTE OF ELECTRICAL AND ELECTRONIC EQUIPMENT (WEEE)”.

THE SYMBOL OF A CROSSED OUT WHEELIE BIN ON THE DEVICE OR PACKAGE SHOWS THAT THE PRODUCT MUST BE COLLECTED SEPARATE FROM OTHER WASTE, AT THE END OF ITS SERVICE LIFE. THEREFORE, THE USER HAS TO TAKE ANY EQUIPMENT THAT HAS REACHED THE END OF ITS SERVICE LIFE TO LOCAL WASTE DISPOSAL CENTRES FOR ELECTRICAL AND ELECTRONIC EQUIPMENT WASTE.

AS AN ALTERNATIVE TO THE IDEPENDENT MANAGEMENT, IT IS POSSIBLE TO DELIVER THE EQUIPMENT WHICH HAS TO BE DISPOSED OF TO THE DEALER, AT THE MOMENT OF PURCHASING A NEW EQUIVALENT DEVICE AT THE ELECTRONIC EQUIPMENT DEALERS WITH A SALES AREA OF AT LEAST OF 400 M^2. ALSO, FOR DISUSED DEVICES WITH DIMENSIONS INFERIOR TO 25 CM, FREE DELIVERY TO THE DEALERS IS POSSIBLE, WITH NO PURCHASE OBLIGATION

A PROPER SEPARATE WASTE COLLECTION AND THE CONSEQUENT HEADING OF THE DISUSED DEVICE TOWARDS ITS RECYCLING, TREATMENT AND ENVIRONMENTALLY COMPATIBLE DISPOSAL, CONTRIBUTES IN PREVENTING ANY POSSIBLE NEGATIVE EFFECTS ON ENVIRONMENT AND HEALTH; ALSO, IT SUPPORTS THE REUSE AND/OR RECYCLE OF THE MATERIALS WHICH COMPOSED THE DEVICE.

OBSOLETE APPLIANCES MUST BE RENDERED UNUSABLE. CUT OFF THE MAINS POWER CORD AFTER UNPLUGGING IT FROM THE WALL OUTLET, AND MAKE SAFE ANY COMPONENTS WHICH MIGHT BE DANGEROUS FOR CHILDREN (LOCKS, DOORS, CABLES, HOSES, ETC.).

The manufacturer declines all responsibility for damage to persons or property resulting from failure to observe the above precautions, from tampering with even a single component of the appliance, or from the use of non original spare parts.

TECHNICAL DATA

TECHNICAL DATA	
Width	597 ÷ 599 mm
Depth measured flush with the outer edge of the control panel	Free standing: 600 mm Semi-integrated: 570 mm
Height	Free standing: from 850 mm to 890 mm Semi-integrated (depending on models): from 820 mm to 890 mm or from 860 mm to 930 mm
Capacity	14 Standard place settings
Water supply pressure	min. 0,05 - max. 0,9 MPa (min. 0.5 – max. 9 bar)
Electrical characteristics	See rating plate

2. Installation and hook-up

Remove the polystyrene basket retainers.
Position the appliance in the desired place of installation. The back or sides of the dishwasher may be placed up against walls or other furniture units. If the dishwasher is installed near a heat source, fit the special insulating panel to prevent overheating and malfunction of the appliance. To ensure stability, install integrated or built-under dishwashers only under continuous worktops, and screw them to the adjacent units. To facilitate the installation procedure, the intake and drain hoses can be positioned in any direction; make sure that the hoses are not kinked, crushed or pulled too tightly. Make sure to tighten the locking ring-nut once the pipes have been placed in the direction required. A hole at least 8 cm in diameter is required to allow the power supply cable and pipes to pass. Before putting the dishwasher into its definitive position, turn on the water tap and check that there are no leaks from the tap connection, the dishwasher connection or the hose.

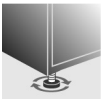

Level the appliance on the floor using its adjustable feet. This operation is essential for ensuring correct operation of the dishwasher.

Some models are equipped with only one adjustable foot at the rear, which can be adjusted by turning the screw on the lower front part of the appliance.

Building-in a dishwasher underneath a hob is ***absolutely forbidden****.*

Moreover, dishwashers may not be installed *directly touching appliances which are not conventional built-in kitchen appliances (e.g. fireplaces, stoves, etc.).*

When installing the dishwasher in a compartment next to one or more other appliances, it is essential to comply with all the recommendations provided by the appliance's manufacturer (minimum distances, installation procedures, etc.).

2.1 Water supply connection

Preventing the risk of clogging or damage: *if the water pipe is new or has not been used for a long time, before connecting to the water supply check that the water is clear and free of impurities, to prevent damage to the appliance.*
The dishwasher must always be connected to the water system with new hoses; old or used hoses must never be reused.

CONNECTING TO THE WATER SUPPLY

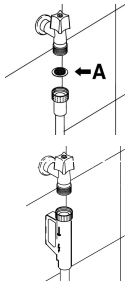

Connect the intake hose to a cold water supply with ¾” gas thread, inserting the filter **A** supplied with the dishwasher. **Take care to screw the hose firmly into place with your hands and then complete by tightening about ¼ of a turn with pliers.**

In dishwashers equipped with the ACQUASTOP device, the filters is already fitted inside the threaded ring.

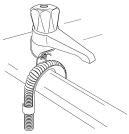

DRAIN CONNECTION

Insert the dishwasher’s drain hose into a drain pipe having a diameter of at least **4 cm**, or alternatively, place it inside the kitchen sink using the plastic support provided, taking care not to crush or excessively bend the hose. It is important to prevent the hose from coming loose and falling. For this purpose, the plastic support is equipped with a hole for tying it to the wall or water tap.

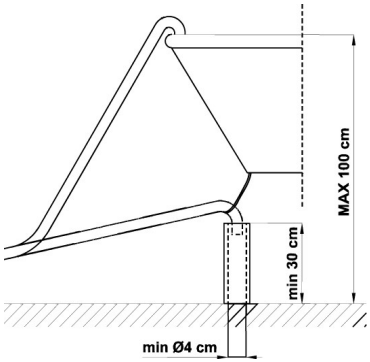

The free end should be positioned at a height of between **30 and 100 cm**, and should never be submerged in water. If a horizontal drain extension hose is used (for a maximum of 3 m) the drain hose can be placed at a maximum height of **85 cm** from the ground.

Class of protection against moisture: IPX0

3. Description of the controls

3.1 Front panel

All the dishwasher controls are grouped on the front panel. Programming and option selection are only possible with the **door closed**.

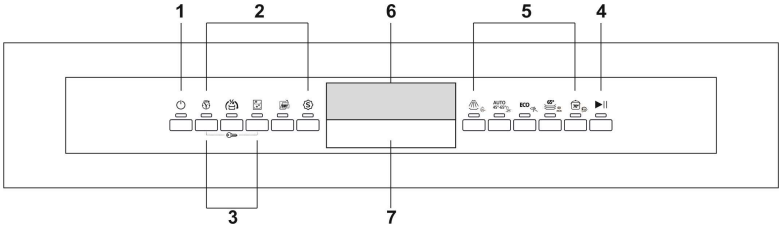

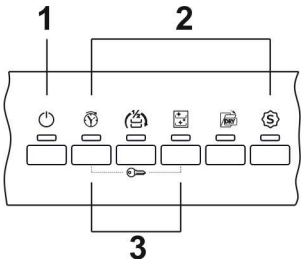

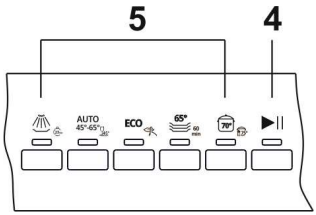

1	**ON/OFF** BUTTON AND WARNING LIGHT
2	**OPTION SELECTION** BUTTONS AND WARNING LIGHTS
3	**"CHILD LOCK"** ACTIVATION BUTTONS
4	**START/PAUSE** BUTTON
5	**PROGRAM SELECTION** BUTTONS
6	INFORMATION **DISPLAY**
7	HANDLE TO OPEN THE DOOR

N.B.: symbols and styling are guideline and may vary depending on the model or version of the dishwasher purchased.

Information display

The dishwasher is equipped with a practical **DISPLAY** which provides information on the programmed dishwasher functions.

	Rinse aid refill indicator	
	Salt refill indicator	
Time to end	End of cycle signal	
	“Child lock” option warning light	
000	Time remaining, delay start and fault code display	
H0....H5	Water softener setting indicator	
b0....b5	Rinse aid setting indicator	
	Program phases warning lights With program in progress, it indicates the status of the program	Prewash
		Wash
		Rinse
		Drying

PROGRAMME NUMBER & SYMBOL	LOAD CROCKERY AND CUTLERY	PROGRAM PROGRESS	DURATION	CONSUMPTION	
			MINUTES (1)	WATER LITRES	POWER KWh (1)
1 SOAK	Pans and dishes awaiting completion of the load.	Cold prewash	15	3,8	0,02
2 AUTO 45-65 (**) AUTO 45°-65°	For light to moderately soiled mixed loads such as dishes and pans. The dishwasher determines the washing parameters automatically.	Prewash Wash at 45-65°C Cold rinse Rinse at 55°C **(2)**/65°C Dry	170 - 200**(2)**/ 110-140 ***	9,8 - 12,5 ***	1,00 - 1,60 ***
3 ECO (*) (**) **ECO**	Crockery and cutlery normally soiled	Cold prewash Wash at 48°C Wash sump Rinse at 35°C **(2)**/64°C Dry	280 **(2)** /216	10,4	0,62 **(2)** /1,05
4 MIX 65° (**) 65°	Moderately soiled mixed loads such as dishes, glasses and pans, even with dried-on residues.	Cold prewash Wash at 65°C Cold rinse Rinse at 55°C **(2)**/70°C Dry	150 **(2)** /110	12,5	1,20 **(2)** /1,60
5 INTENSIVE 70°	Very dirty pans and dishes, even with dried-on residues.	Hot prewash Wash at 70°C 2 cold rinse Rinse at 70°C Dry	155	15,5	1,85

If the dishwasher door is open or not properly closed, the washing cycle will not start.

* Reference program as per **AS/NZS 2007**.
During the comparative tests the dishwasher shall to be set as follow:
- Dry assist option **must be active** (default), the light will be on.
- **At the end of the cycle the Auto Door open function ranges between 100-120 mm**.

(1) The cycle duration and power consumption may vary according to the water and room temperatures, and the type and amount of dishes.
(2) With dry assist option active (default).

The dry assist option (automatic opening door at the end of the cycle) is available in the programs indicated with (**.)
AUTO PROGRAM*:** duration and consumption indicated are related to the minimum or maximum degree of soiling recognised by the sensor system in the dishwasher.

ADDITIONAL PROGRAMS
(see relevant section for explanation of functioning modes)

PROGRAMME NUMBER & SYMBOL	LOAD CROCKERY AND CUTLERY	PROGRAM PROGRESS	DURATION	CONSUMPTION	
			MINUTES (1)	WATER LITRES	POWER KWh (1)
6 EXPRESS 27' 27min P1+S	Dishes with very light soilng, washed immediately after use	Wash at 38°C Rinse at 50°C	27	6,7	0,70
7 CRYSTAL (**) 45° P2+S	Wine glasses and lightly soiled fine china.	Wash at 45°C 2 cold rinses Rinse at 55°C **(2)**/70°C Dry	125(**2**) /80	12,5	1,00(**2**) /1,30
8 SILENT (**) P3+S	Wash cycle suitable for moderately soiled dishes, even with dried-on residues. Ensures maximum noise reduction and is therefore ideal if you wish to run it during the night.	Wash at 55°C Cold rinse Rinse at 55°C **(2)**/ 65°C Dry	270(**2**)/ 245	9,6	1,10(**2**) /1,25
9 FULL EXPRESS 60' 60 min P4+S	Quick cycle for moderately soiled mixed loads such as dishes, glasses and pans shortly after use. The load is washed and dried in 60 minutes.	Wash at 65°C Cold rinse Rinse at 70°C Dry	60	9,6	1,40
10 HYGIENE 99,9% 75° P5+S	Intensive cycle for plates, pots, pans, feeding bottles. Ideal for baby dishes or if there are allergy sufferers in the family in order to achieve a higher level of hygiene.	Hot prewash Wash at 70°C 2 cold rinses Rinse at 75°C Dry	130	15,8	1,90

HYGIENE
Increases the temperature of the final rinse to obtain a greater level of hygiene. Suitable for the intensive washing of plates, pots, pans, cutting boards, feeding bottles. Ideal for baby dishes or if there are allergy sufferers in the family.

If the dishwasher door is open or not properly closed, the washing cycle will not start.

(1) The cycle duration and power consumption may vary according to the water and room temperatures, and the type and amount of dishes.
(2) With dry assist option active (default).

The dry assist option (automatic opening door at the end of the cycle) is available in the programs indicated with (**.)

Notice for testing institutes
Testing institutes are provided with guidelines for comparative tests (e.g. according to AS/NZS 2007). request the guidelines by contacting us at the following e-mail address: dishwasher@test-domestic-appliances.com
When making a request, please specify the model (MOD) and the serial number (S/N) indicated on the plate on the side of the door.

3.2 Washing programs

Before starting a washing program make sure that:

- *The water supply tap is **open**.*
- *The softener **container** contains **regenerating salt** (if required).*
- *The **correct amount of detergent** has been added to the **dispenser**.*
- *The baskets have been **correctly loaded**.*
- *The spray arms are able to **rotate freely** and without obstruction.*
- *The dishwasher door is securely closed.*

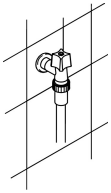

Warning:
during the initial phase of the washing program, the operation of the spray arms is not perceived because they start rotating about 5 minutes after the start. This is the normal operation of the washing cycle.

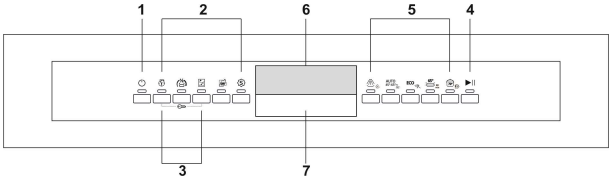

LIGHTING
When the ON/OFF button **(1)** is pressed, the dishwasher switches on. After approximately **3 seconds** the **DISPLAY (6)** will light up.

PROGRAMMING
All the programming operations are possible only with closed door. With open door, on the **DISPLAY** will appear **- - : - -.**

PROGRAM SELECTION

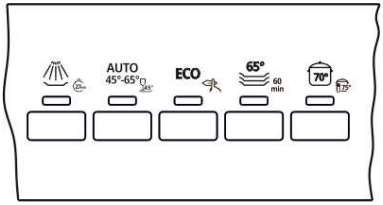

The program selection is possible through the relative buttons.

By pressing the relative button of the desired program (see table) the respective LED will light up confirming the selection and on the **DISPLAY** a program duration forecast will appear ("**h.mm**").

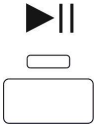

STARTING PROGRAM

To start the dishwasher, press the **START/PAUSE** button **(4)**, the light starts to flash (confirmation beep).
From this moment the cycle duration on the **DISPLAY** starts to decrease. The time remaining will adjust itself during the cycle. The running time is influenced by factors such as the soiling level and quantity of dishes, and the incoming water temperature. As a result, it is normal to see time change during the program (increase or decrease), especially when transitioning from one phase to another (e.g., from washing to rinsing).

Program progress is indicated by the program phases that show the status of the current cycle.

The current phase flashes, while the next washing phases lights stay on. At the end of each phase, the symbol will turn off.

N.B.: when a program without a prewash is selected the corresponding symbol does not light up.

Prewash

Wash

Rinse

Drying

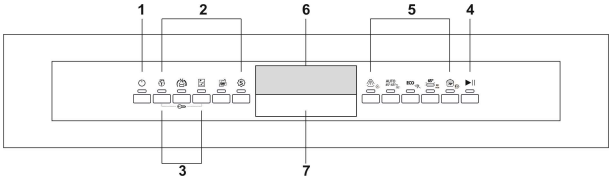

PROGRAM END
At the end of the program the **DISPLAY** shows **“end”.** By pressing one of the program buttons the dishwasher is ready to start a new cycle.

INTERRUPTING A PROGRAM
To interrupt a program in progress:

- press the **START/PAUSE** ▶II for a few seconds until when the **START/PAUSE** remains lit (confirmation beep). You can now restart the program by pressing the **START/PAUSE** button again until it restarts.

CHANGING A PROGRAM
To change a program in progress:

- interrupt the running program (see “**INTERRUPTING A PROGRAM**”);
- select the new program;
- press the **START/PAUSE** button ▶II again to start the new program.

CANCELLING A PROGRAM
To cancel a program which is running:

- Interrupt the program (see "**INTERRUPTING A PROGRAM**")
- Press the **START/PAUSE** button ▶II and hold it down; until the display shows **"P0"** and the dishwasher will immediately switch to the end of the cycle and drain the tank (during this process, the **"START/PAUSE** led will flash). When the dishwasher has finished draining, the end of cycle **"End"** message appears on the display.

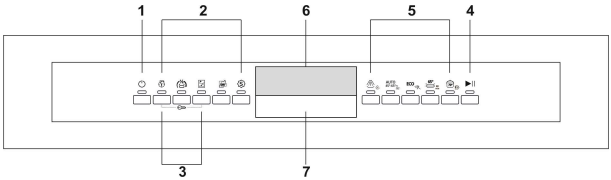

*In case that the door is opened during the operation, the **START/PAUSE** button will need to be pressed again to resume the program. The program will continue from the point in which it was interrupted.*
In case that the tub temperature is higher than 50°C the program will start about 60 seconds later.

OPTIONS

The selection of options is controlled by the corresponding buttons and indicated by the LED light below the symbol. Please refer to the paragraphs for each option for detailed usage instructions.

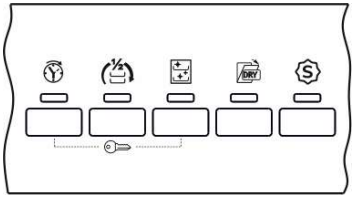

SPECIAL

Allows you to enable additional programs when selected together with any wash cycle. After having selected the required wash cycle, press the button (the light turns on). It turns off automatically when the cycle has finished.

½ LOAD FLEXI ZONE

Flexi Zone

This setting is ideal for washing just a few dishes, allowing for energy and water savings. Place the dishes in both baskets and use less detergent in the dispenser compared to what you would use for a full load.

AUTOMATIC DOOR OPENING – DRY ASSIST

The program ends with a drying cycle that consists of a time during which the door is closed, and a time during which the door is slightly open (just waiting, to assist drying). The duration depends on the program and model.

Any intervention (opening / closing the door, switching off etc.) during this stage will end the program early.

The program can be interrupted during the drying cycle and the dishwasher can unloaded before the cycle has completely ended, which is indicated by a visual and/or audible alarm (depending on the model), but best drying results may not be obtained.

The complete program ends only when indicated by a visual and/or audible signal (depending on the model).

There must be sufficient space available for the door to open. The door must not be forced open and closed before the wash cycle has ended completely.

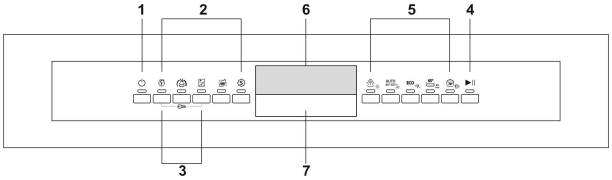

DELAY
Press the **DELAY** button to set the dishwasher cycle to start during the required time period (e.g. night). Depending on the model, this may be indicated on the display or by specific lights. **The option cannot be selected once the cycle is running**. To cancel the setting, press the button several times until the lights switch off. After the door has been closed, the dishwasher will carry out a pre-wash cycle, after which the set “cycle delay” option will be activated.

SELF CLEAN
Dishwasher cleaning cycle. The cycle should be started with the machine empty, without dishes. It is recommended to run the program every 2-3 months, using special dishwasher cleaners. The light flashes during operation. At the end of the cycle it remains on and cycle lights **4 and 5** flash.
The display (if available) shows “End”.

TO SAVE ON ENERGY! … AND PROTECT THE ENVIRONMENT

- *Always use the dishwasher **with a full load**.*
- *Load the dishwasher as indicated in the instructions manual. If the dishwasher is loaded incorrectly, it may lead to poor results as well as waste water, energy and detergent.*
- *Do not wash dishes under running water before placing them in the dishwasher. It would just waste water and energy.*
- *Use the washing program that is **most appropriate** for each type of load.*
- *If available, connect the dishwasher to a hot water supply up to 60°C.*
- *If the manufacturer's instructions and recommendations are followed, washing the same number of similarly soiled dishes in a dishwasher consumes less water and energy than if they were washed by hand.*

TO CUT DOWN ON DETERGENT CONSUMPTION! … AND PROTECT THE ENVIRONMENT

The phosphates contained in dishwasher detergents are harmful to the environment. To avoid using excessive amounts of detergent and to save on electricity, observe the following:

- ***separate the more delicate items*** *from dishes that are more resistant to aggressive detergents and high temperatures;*
- ***do not pour*** *detergent directly onto the dishes.*

If the door has to be opened while washing is in progress, the program will be interrupted. The relative light will keep flashing and a beeper will signal that the cycle has not been completed. You must wait about ***1 minute*** *before closing the door to restart the program. When the door is closed the program will continue from where it was interrupted. This operation should only be carried out* ***if strictly necessary****, because it might cause problems in running of the program.*

ENERGY MANAGEMENT

After **5 minutes** (washing cycle completed, stopped or set but not started) the dishwasher switches off.

REMOVING THE DISHES

At the end of the washing program, wait at least **20 minutes** before removing the dishes, to allow them to cool down. To prevent any water droplets on the upper basket from falling on the dishes in the lower basket, it is **advisable** to unload the lower basket first, and then the upper basket.

4. Operating instructions

After having installed the dishwasher, remove the basket retainers and prepare the machine for use as follows:

- Regulate the water softening system;
- Add regenerating salt;
- Add rinse aid and detergent.

4.1 Setting the water hardness

- The dishwasher must be **switched on** and the door open.
- Press and hold the **delay start** button until **"h"** appears on the display followed by the current setting (e.g. **h3**).
- Press the **delay start** button once or several times to select the required hardness **(from h0 to h5)**.

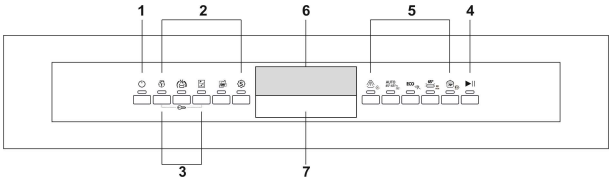

After carrying out the adjustment or displaying the current setting, if you do not touch the button for a few seconds the dishwasher will automatically exit from adjustment mode and return to the standard operating mode.

WATER HARDNESS TABLE

WATER HARDNESS		SETTING
German degrees (°dH)	French degrees (°dF)	
0 - 6	0 - 11	**h.-0 NO SALT**
7 - 10	12 - 18	**h.-1**
11 - 15	19 - 27	**h.-2**
16 - 21	28 - 37	**h.-3**
22 - 28	38 - 50	**h.-4**
29 - 50	51 - 90	**h.-5**

Contact your local water board for information on the hardness of your water supply. Default settings: **h3 - 16-21°dH** – **28-37°dF**

4.2 Adding the salt

The amount of scale contained in the water (water hardness index) can cause whitish staining on the dry dishes, which tend to become dull over time. The dishwasher is equipped with an automatic softening system which uses a special regenerating salt to reduce the hardness of the water.

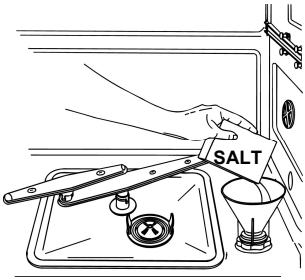

When using water of medium hardness, the regenerating salt container should be refilled after approximately **20 washing cycles**. The salt container can hold approximately **1 kg** of salt in grains. Some models are equipped with an optical salt refill indicator. In these models, the cap of the salt container contains a green float which descends as the salt concentration in the water drops. When the green float can no longer be seen through the transparent cap, the container must be topped up with regenerating salt. The container is situated at the bottom of the dishwasher.

The dishwasher salt prevents the formation of scale deposits.

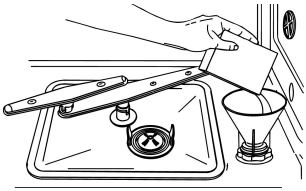

- Remove the lower basket.
- Unscrew the cap of the salt container by turning it anticlockwise.
- When using the dishwasher for the first time, fill the container with a litre of water.
- Pour salt (approx. 1 kg) into the container using the funnel provided with the dishwasher.
- When finished, remove any salt residues before screwing the cap back on.

- *Each time the salt container is refilled, make sure that **the cap is securely closed**. The mixture of water and detergent must never penetrate the salt container, as this would compromise the operation of the regeneration system. In this case warranty cover will be voided.*
- ***Only use regeneration salt specifically for domestic dishwashers. Do not use table salt**, since it contains insoluble substances that could damage the water softener system.*
- *After having added salt, run a wash cycle to remove any excess salt. In this way, the excess saline solution will be immediately removed by the water; the prolonged presence of salt water inside the tank may lead to **corrosion**.*

***Be careful not to confuse the salt and detergent packages**; adding detergent to the salt container will **damage** the water softening system.*

4.3 Adding the rinse aid

The detergent and rinse aid dispensers are situated on the inner part of the door: the **detergent dispenser** is on the left, and the **rinse aid dispenser** is on the right.

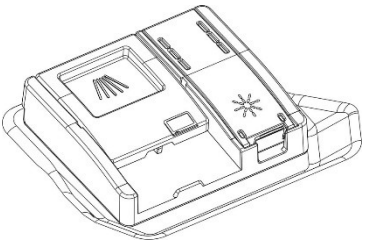

Rinse aid helps the dishes dry faster and prevents the formation of scale deposits and staining; it is automatically added to the water during the final rinse cycle, from the container situated on the inner side of the door.

To add rinse aid:

- Open the dispenser by pressing and lifting the tab on the cover.
- Top up again when the rinse aid indicator light turns on.
- Close the cover, a click indicates when it is closed.
- Use a cloth to remove any spillage of rinse aid which might lead to the formation of excess foam.

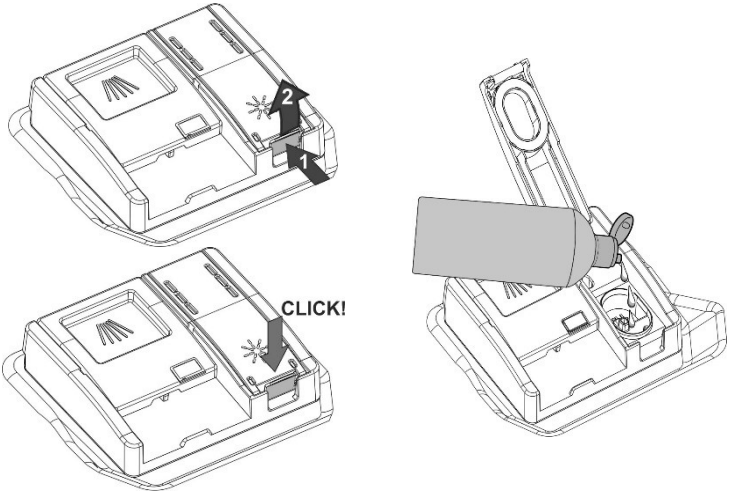

4.4 Adjusting the amount of rinse aid

- The dishwasher must be **switched on** and the door open.
- Press and hold the **delay start** button until **"b"** appears on the display followed by the current setting (e.g. **b3**).
- Press the **delay start** button once or several times to select the required hardness **(from b0 to b5)** according to the following table.

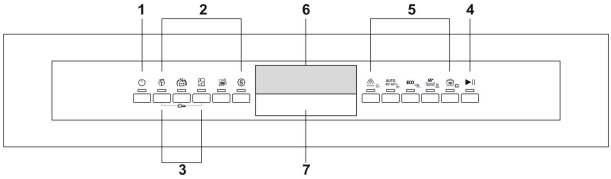

After carrying out the adjustment or displaying the current setting, if you do not touch the button for a few seconds the dishwasher will automatically exit from adjustment mode and return to the standard operating mode.

RINSE AID ADJUSTMENT TABLE	
b0	0 – not dispensed
b1	minimum 2 ml
b2	3 ml
b3	4 ml
b4	5 ml
b5	maximum 6 ml

Default settings: **b4 - 5 ml**

- *The amount of rinse aid must be **increased** if the washed dishes appear dull or feature circular stains.*
- *If, on the other hand, the dishes are sticky or have white streaks, it is necessary to **reduce** the rinse aid setting.*

4.5 Adding detergent

- Open the detergent dispenser cover by lightly pressing the button **P**.
- Add the detergent or tablet.
- Close the cover by sliding it until it stops, indicated by a click.

The dispenser will open automatically during the wash cycle.
Only add the detergent or tablet if the dispenser is dry.

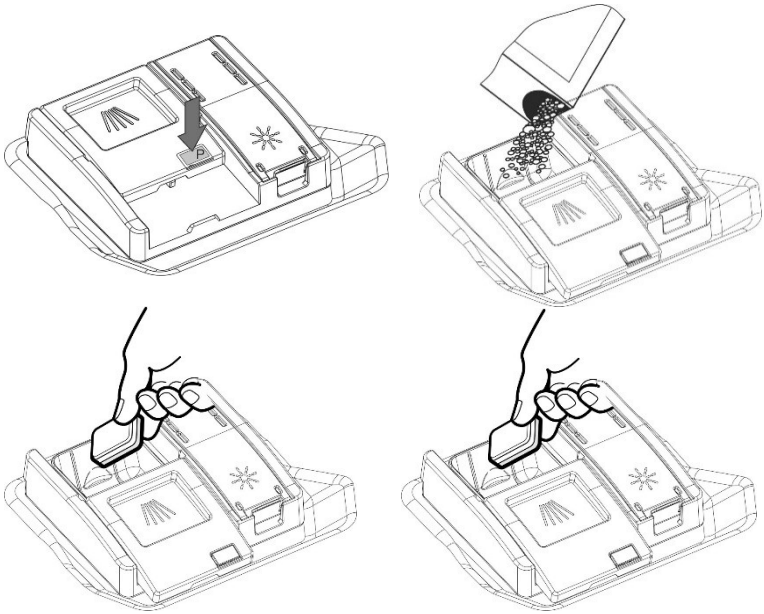

*With the exception of the **SOAK** program, before every washing cycle it is necessary to add the required amount of detergent to the **detergent dispenser**. The rinse aid, on the other hand, should only be added as required.*

- *When a program with hot prewash is selected (see program table), extra detergent must be placed in the cavity on the lid of the detergent dispenser.*
- *Use **only** detergents specially formulated for dishwashers. The detergent packs must be sealed and stored in a dry place to prevent the formation of lumps which may negatively affect washing results. Once opened the detergent packs should not be kept for too long, otherwise the detergent loses its effectiveness.*
- *Do not use detergents for washing dishes by hand because they may affect the operation of the dishwasher.*
- *Add the correct amount of detergent. An insufficient amount of detergent will result in a partial removal of dirt from the dishes, whereas an excessive amount is wasteful and does not improve the washing results.*

The introduction of detergent into the rinse aid dispenser, even in liquid form, will damage the dishwasher.

4.6 General warnings and recommendations

Before using the dishwasher for the first time, it is advisable to read the following recommendations concerning dish types to be washed and their loading.
There are generally no constraints on the washing of domestic dishes, but in certain cases it is necessary to take their characteristics into account.

Before loading the dishes into the baskets it is necessary to:

- *remove coarse food remains: e.g. bones, fish-bones, etc. which may clog the filter or damage the wash pump.*
- *soak any pots or pans with burnt-on food remains on the bottom to facilitate removal, then load them into the LOWER BASKET.*

There is no need to pre-wash the dishes under running water before loading them into the baskets since this only wastes water.

Correct loading of the dishes helps ensure optimal washing results.

WARNING!

- *Make sure that the dishes are securely in place so that they cannot tip over or obstruct the rotation of the spray arms during the washing cycle.*
- *Do not place very small objects in the baskets as these could fall and obstruct the spray arms or the wash pump.*
- *Containers such as cups, bowls, glasses and pots should always be loaded with the opening facing downwards and with any cavities at an angle, to allow the water to drain out.*
- *Do not stack dishes or place them in such a way that they cover one other.*
- *Do not place glasses too close together because they may knock against each other and break, or there might be staining at the point where they touch.*

MAKE SURE that the items being washed are dishwasher-safe.

Items which are not dishwasher-safe:

- ***Wooden dishes, pots or pans:*** *these may be damaged by the high washing temperatures.*
- ***Handcrafted items:*** *these are rarely suitable for washing in a dishwasher. The relatively high water temperatures and the detergents used may damage them.*
- ***Plastic dishes:*** *heat resistant plastic dishes must be washed in the upper basket.*
- ***Dishes and objects in copper, tin, zinc or brass:*** *these tend to stain.*
- ***Aluminium dishes:*** *items made from anodised aluminium may lose their colour.*
- ***Silverware:*** *silver items may stain.*
- ***Glass and crystal:*** *in general, glass and crystal objects can be washed in the dishwasher. However, certain types of glass and crystal may become dull and lose their clearness after many washes. Therefore, for these items we recommend using the least aggressive program available.*
- ***Decorated items:*** *the decorated objects available on the market are generally able to withstand washing in the dishwasher, although the colours may fade after a great many washes. If in doubt as to the fastness of the colours, it is advisable to wash just a few items at a time for approximately one month.*

4.7 Using the baskets

The dishwasher has a capacity of **14 place-settings**.

LOWER BASKET

The lower basket receives the full force of the lower spray arm, and should therefore be used for the “toughest” items with a heavier degree of soiling.

All types and combinations of loads are permitted, provided that the dishes, pots and pans are arranged with all the soiled surfaces exposed to the water jets coming from the bottom.

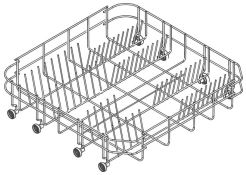

With fixed supports

To make the most of the space inside the basket when loading large items, certain models are equipped with fold down supports for plates in 2 or 4 sections.

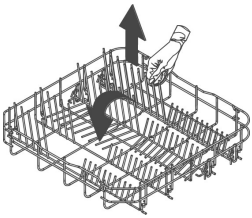

With fold down supports

BOTTOM BASKET INSERTS

Some models are equipped with bottom basket inserts which improve the drying of dishes. The inserts are supplied in the accessories bag; to use them, simply fit them into place as shown.

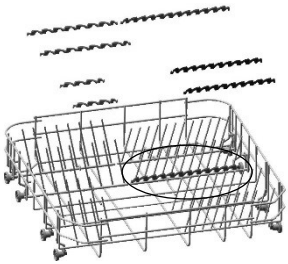

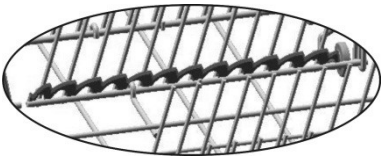

LOADING THE LOWER BASKET

Carefully load flat plates, soup plates, dessert and serving dishes, positioning them vertically. Pots, pans and their covers must be loaded upside down. When loading soup plates and dessert bowls, be sure to leave a gap between them.

Loading examples:

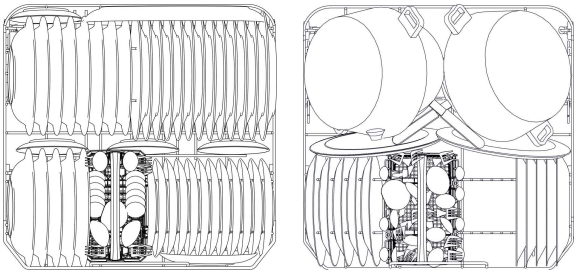

UPPER BASKET

The upper basket should be loaded with small or medium-sized items such as glasses, small plates and saucers, tea or coffee cups, shallow bowls and light objects. If the upper basket is used in the lowest position, it can also be loaded with serving dishes, provided they are only lightly soiled.

LOADING THE UPPER BASKET

Load plates facing forward; cups, bowls etc. must always be facing downwards. The left side of the basket can be loaded with cups and glasses on two levels. In the centre section, plates and saucers can be loaded vertically into the supports provided.

Loading examples:

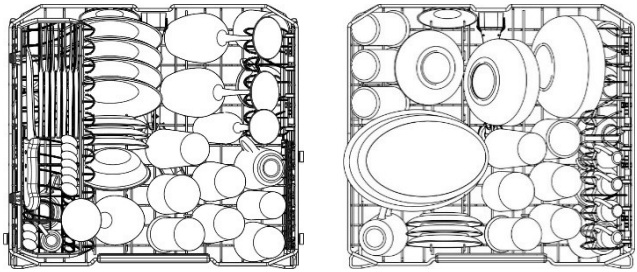

CUTLERY BASKET

The basket is suitable for all types of cutlery, except long items that may **interfere** with the upper spray arm. The cutlery should be arranged in the spaces in the upper racks to allow the water to pass effectively between the items.

Forks and spoons should be positioned with the **handle facing downwards**, taking care not to injure yourself with the prongs of the forks. **Knives** should be placed in the tray on the upper rack or in the cutlery drawer, if present (depending on the model), otherwise position them with the **handles facing upwards**.

Ladles, wooden spoons and kitchen knives can be placed on the upper rack, **making sure that the blades of the knives do not protrude from the basket.** The upper racks can be opened in order to insert, for example, small items.

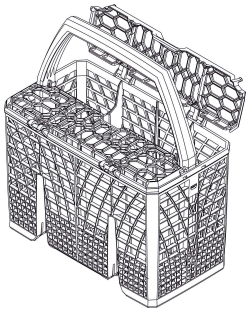

The cutlery basket slides across the dishwasher and can be **placed in any position** to allow optimal use of the space in the bottom basket.

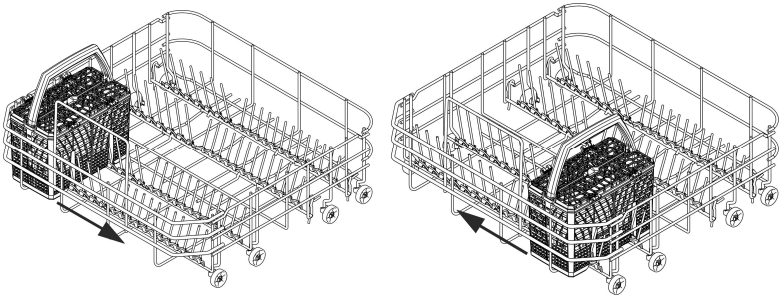

UPPER BASKET ACCESSORY
(depending on the model)

Cutlery tray
For knives, spoons (tea and dessert) and long objects. The ends are designed to hold long stemmed glasses.
- It can be removed by pressing and pushing the release levers **(B)** at the same time.
- It has to be lowered if the upper basket is in the topmost position. Press the catches **(G)** simultaneously.

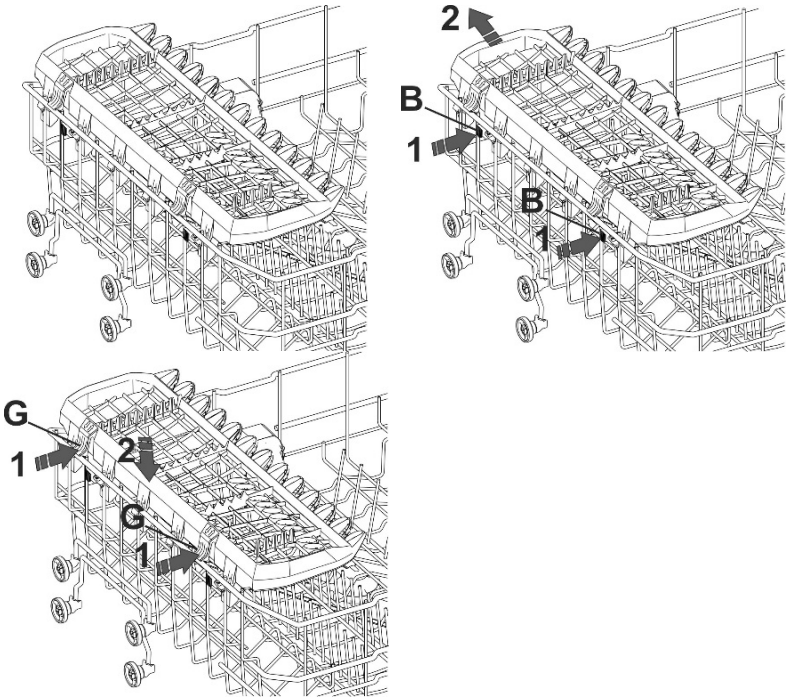

Fold-down shelves
For mugs, cups and long objects. The ends are designed to hold long stemmed glasses
When not used they can be moved to a vertical position (until a click is heard).

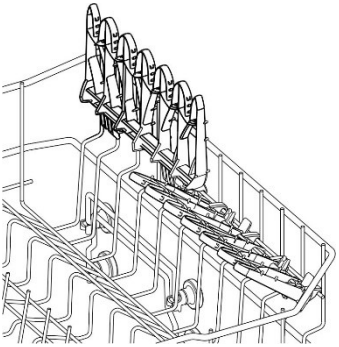

Shelves with expandable wings (depending on the model).
For small objects, mugs and cups.
They can be used either closed or open (pull the upper, sliding part). To close them, press the release device (S) and slide them downwards.
The ends are designed to hold long stemmed glasses (even when closed).
When not used they can be moved to a vertical position (until a click is heard).

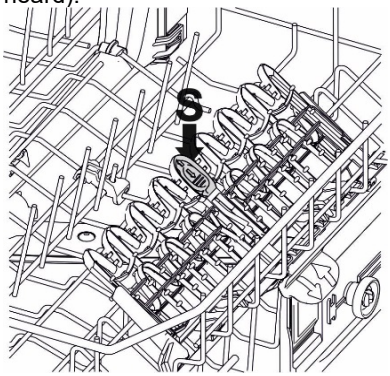

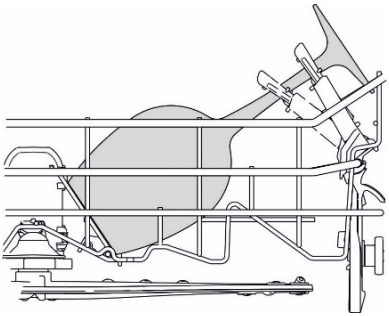

Fold-down tines (depending on the model).
These can be secured in a vertical position, resting on the bottom of the basket if unused, or placed in an intermediate position, as required.
The single tine on the right is ideal for supporting long stemmed glasses.

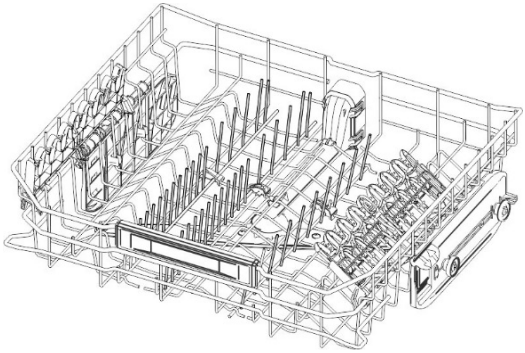

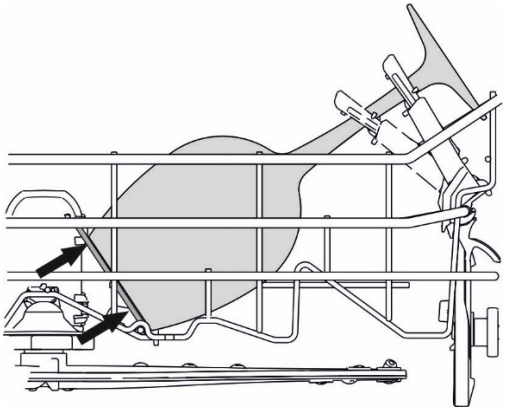

ADJUSTING THE UPPER BASKET

The height of the top basket can be adjusted to allow large dishes or pans to be placed in the bottom basket.

The sides of the basket **must always be set at the same height**.

- Raise the basket by pulling on the top edge **(1)**, to the first or second catch depending on the height required.
- To lower the basket, first release it by pulling the release lever **(2)**.

Adjustment is also possible with the basket loaded, but in this case when lowering the basket it should be held steady with one hand to avoid knocking the dishes.

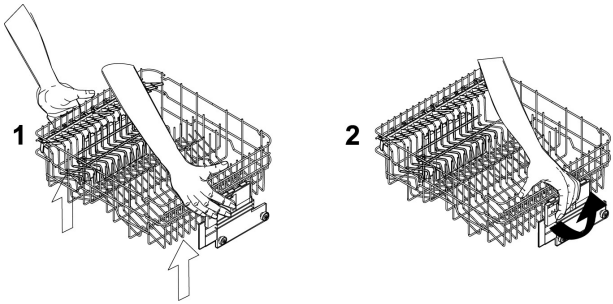

5. Cleaning and maintenance

Before carrying out any work, always unplug the appliance from the electrical supply or switch off the all-pole disconnection device.

5.1 General warnings and recommendations

Avoid the use of acidic or abrasive detergents.

Clean the outer surfaces and door-lining of the dishwasher regularly using a soft cloth moistened with water or with a normal detergent suitable for painted surfaces. Clean the door gaskets with a damp sponge. Periodically (once or twice a year) it is advisable to clean the tank and gaskets, using a soft cloth and water to remove any deposits.

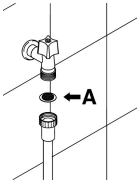

CLEANING THE WATER INTAKE FILTER
The water intake filter **A** located at the outlet of the water supply tap needs to be cleaned periodically.
After having closed the water supply tap, unscrew the end of the water intake hose, remove the filter **A** and clean it delicately under running water. Reassemble filter **A** in its seat and carefully screw the water intake hose back into position.

CLEANING THE SPRAY ARMS
The spray arms can be easily removed for periodic cleaning of the nozzles, to prevent possible clogging. Wash them under running water and carefully replace them in their seats, **checking that their rotary movement is in no way impeded**.

- To remove the **upper** spray arm, unscrew locking ring **R**.

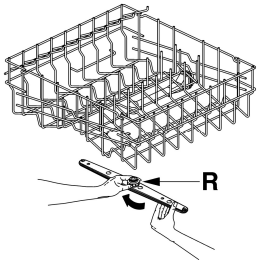

- To remove and clean the **planetarium** sprayer follow the instructions provided.

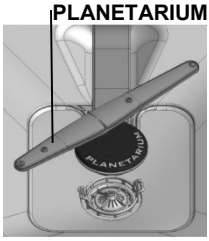

CLEANING THE FILTER UNIT

- It is advisable to periodically inspect the centre filter and, if necessary, to clean it.
- remove the planetarium sprayer follow the instructions provided.
- push the centre filter **D** from the underside to remove it from the micro-filter:
- separate the two parts which make up the plastic filter by pressing the body of the filter in the zone shown by the arrows;
- remove the centre filter by lifting it upwards.

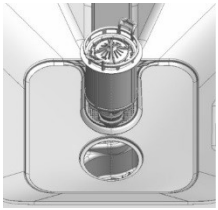

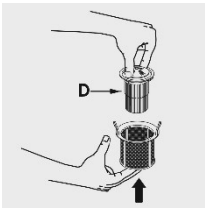

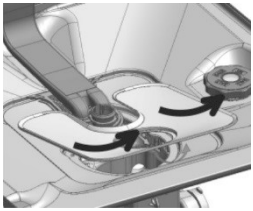

GENERAL WARNINGS AND RECOMMENDATIONS FOR CORRECT MAINTENANCE:

- *The filters should be cleaned **under running water** using a stiff brush.*
- ***When removing the filter**, take care that there are no food residues on it. If any residues fall into the washing pit they might block hydraulic components, or block the spray arm nozzles.*
- *It is essential to **thoroughly clean the filters** according to the above instructions: the dishwasher cannot function if the filters are clogged.*
- ***Carefully replace** the filters in their seats, to avoid damaging the wash pump.*

PROLONGED DISUSE:

- *Run the soak program twice in succession.*
- ***Unplug** the power cord from the socket.*
- ***Leave the door slightly open**, in order to prevent the formation of unpleasant odours inside the washing tank.*
- ***Fill the rinse aid dispenser**.*
- ***Shut off the water supply tap.***

BEFORE STARTING THE DISHWASHER AFTER PROLONGED DISUSE:

- *Check that there are no deposits of sludge or rust inside the water pipe: if there are, allow the water to run from the water supply tap for a few minutes.*
- ***Plug the power cord** back into the socket.*
- ***Reconnect the water intake hose and open the tap again.***

TROUBLESHOOTING MINOR PROBLEMS

In some cases it is possible to remedy minor problems by referring to the following instructions:

If the program fails to start, check that:

- *the dishwasher is connected to the electrical power supply;*
- *there is no power failure;*
- *the water tap is open;*
- *the dishwasher door is properly closed.*

If water remains inside the dishwasher, check that:

- *the drain hose is not kinked;*
- *the drain siphon is not obstructed;*
- *the dishwasher filters are not clogged.*

If the dishes are not being cleaned properly, check that:

- *the correct amount of detergent has been added;*
- *the dishes are being loaded correctly;*
- *the selected program is suitable for the dish types and their degree of soiling;*
- *all the filters are clean and positioned correctly;*
- *the spray arm nozzles are not obstructed;*
- *there is no object obstructing the rotation of the spray arms.*

If the dishes fail to dry or remain dull, check that:

- *there is rinse aid inside the rinse aid container;*
- *the rinse aid dispenser setting is correct;*
- *the detergent used is of good quality and has not lost its effectiveness (for example, through incorrect storage, with the box left open).*
- *Non-dry synthetic dishes.*
  Synthetic material has a lower heat storage capacity and is therefore harder to dry.

If the dishes show signs of streaking, staining, etc., check that:

- *the rinse aid dispenser setting is not too high.*

If there are visible traces of rust inside the tank:

- *the tank is made of steel, and therefore any rust marks are due to external elements (fragments of rust from the water pipes, pots, cutlery, etc.). Special products are commercially available to remove such marks;*
- *check that the amount of detergent being used is correct. Certain detergents can be more corrosive than others.*

Only for models with this lock version.

If the door does not close:

1 - Check the position of the door lock catch **(D)**

2 - **If necessary**, raise it by adjusting the plastic screw **(V)** next to the catch.

3 - Check the condition of the lock hook; if it has not triggered (reference **N**), the door opens and closes normally. **If it has triggered** (reference **S**), close the door with force until it resets; open and close the door.

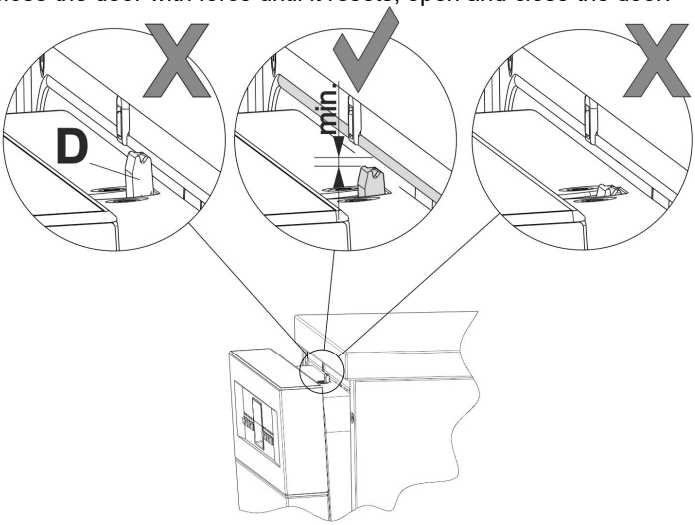

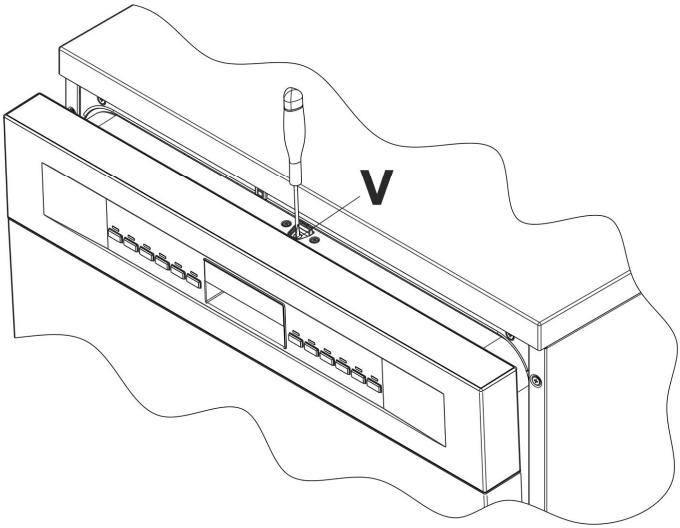

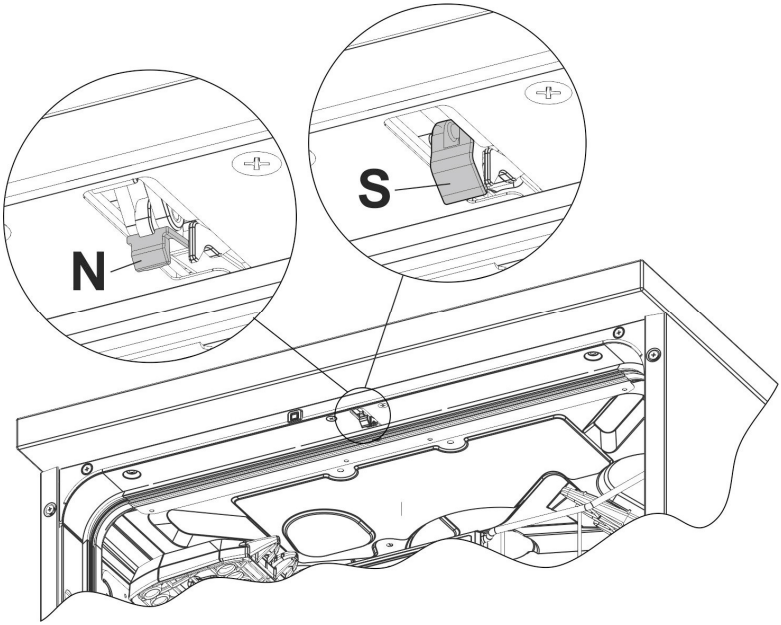

If after following the above troubleshooting instructions the problem persists, call the nearest After-Sales Centre.

WARNING: any operations performed on the appliance by unauthorised persons are not covered by the warranty and shall be paid for by the user.

6. Troubleshooting

The dishwasher is equipped with a self-diagnostics system that is capable of detecting and signalling a number of possible faults.

TABLE OF FAULTS DETECTED BY THE SELF-DIAGNOSTICS SYSTEM

FAULT	DESCRIPTION
E 01	The anti-flooding system (where present) has been activated.
E 02	The water level limitation system has tripped.
E 03	The appliance cannot heat the water.
E 04	The temperature sensor is disconnected.
E 05	The appliance cannot take in the water.
E 06	The appliance cannot drain the water from the tank.
E 07	The dishwasher is not able to "measure" the amount of water loaded accurately.
E 08	Problem on the water distribution system to the baskets.
E 09	Water intake system malfunction.
E 11	Wash motor pump does not work

If an alarm occurs, the machine stops the current program and indicates the fault.

- Alarms **E1 and E11** require you to contact the technical assistance service.
- Alarm **E7** is shown at the end of the cycle however, the dishwasher has completed the cycle without causing any damage to the machine.

For all other alarms, proceed as follows: stop the current program, switch off the dishwasher. Switch on and program the dishwasher again to start the new wash cycle.

If the malfunction persists, contact your authorised Service Centre and ***provide them with the fault code****.*
The contact details of the Technical Assistance Department can be found on the warranty certificate and the website

The manufacturer reserves the right to make any changes deemed necessary for the improvement of its products without prior notice.