Contents

EN

1. *Safety and operating instructions* _____ 2
2. *Installation and hook-up* _____ 7
3. *Description of the controls* _____ 11
4. *Operating instructions* _____ 21
5. *Cleaning and maintenance* _____ 40
6. *Troubleshooting* _____ 46

Thank you for choosing one of our products.
You are advised to read this manual carefully; it contains all the information you need about the right conditions for the proper, safe use of your dishwasher.
The individual sections are laid out to provide you with a step-by-step guide to all your appliance's functions; the texts are easy to understand and are complete with detailed illustrations.
Recommendations are given for the correct use of the baskets, spray arms, containers, filters, washing programs, and for operating the controls.
Following the cleaning instructions provided here will keep your dishwasher's performance at peak levels in the long term.
This user-friendly manual will provide answers to all your questions about use of the dishwasher.

INSTALLATION INSTRUCTIONS: these are intended for the ***qualified technician*** *who must carry out the installation, hook-up and testing of the appliance.*

USER INSTRUCTIONS: these consist of recommendations for using the appliance, a description of its controls and of the correct cleaning and maintenance procedures.

1. Safety and operating instructions

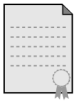

THIS MANUAL FORMS AN INTEGRAL PART OF THE APPLIANCE; IT MUST ALWAYS BE KEPT INTACT TOGETHER WITH THE DISHWASHER FOR FUTIRE REFERENCE. BEFORE USING THE APPLIANCE, CAREFULLY READ ALL THE INSTRUCTIONS CONTAINED IN THIS MANUAL. THEY CONTAIN IMPORTANT INFORMATION FOR THE INSTALLATION, USE AND MAINTENANCE OF THE APPLIANCE. IN THE EVENT OF SALE OR TRANSFER, ENSURE THAT THE MANUAL ALWAYS ACCOMPANIES THE APPLIANCE.

THIS APPLIANCE IS INTENDED **FOR INDOOR USE IN A HOUSEHOLD ENVIRONMENT** AND SIMILAR SUCH AS STAFF KITCHENS OF SHOPS, OFFICES AND OTHER WORKPLACES, INSTITUTIONS, AND FOR THE USE BY GUESTS AT HOTELS, HOSTELS, BED AND BREAKFAST AND OTHER RESIDENTIAL FACILITIES.

THIS APPLIANCE MUST NOT BE INSTALLED AND USED IN NON-STATIONARY PLACES (FOR EXAMPLE ON SHIPS, MOTOR CARAVANS, CARAVANS…….).

THIS APPLIANCE COMPLIES WITH **DIRECTIVES 2006/95/EC AND 2004/108/EC** CURRENTLY IN FORCE, INCLUDING THE PREVENTION AND ELIMINATION OF RADIO FREQUENCY INTERFERENCE AND IS DESIGNED FOR THE FOLLOWING PURPOSE: **WASHING AND DRYING OF DISHES;** ANY OTHER USE SHALL BE CONSIDERED IMPROPER. THE MANUFACTURER DECLINES ALL RESPONSIBILITY FOR USES OTHER THAN THOSE DESCRIBED ABOVE.

DO NOT USE APPLIANCES WHICH HAVE BEEN DAMAGED DURING TRANSIT! IF IN DOUBT, CONSULT YOUR DEALER.

THE APPLIANCE MUST BE INSTALLED AND CONNECTED IN ACCORDANCE WITH THE INSTRUCTIONS PROVIDED BY THE MANUFACTURER. INSTALLATION MUST BE PERFORMED BY A QUALIFIED TECHNICIAN, IN COMPLIANCE WITH THE REGULATIONS IN FORCE.

DO NOT LEAVE THE DISCARDED PACKAGING MATERIALS UNSUPERVISED WITHIN THE HOME. DO NOT ALLOW CHILDREN TO PLAY WITH PACKAGING MATERIALS. SEPARATE THE VARIOUS MATERIALS WHICH MAKE UP THE PACKAGING AND TAKE THEM TO THE NEAREST SORTED WASTE COLLECTION CENTRE.

THE NAME PLATE FEATURING THE TECHNICAL DATA, SERIAL NUMBER AND MARKINGS IS VISIBLY POSITIONED ON THE INNER EDGE OF THE DOOR. **THE NAME PLATE MUST NEVER BE REMOVED.**

THE APPLIANCE MUST BE PROVIDED WITH AN EARTH CONNECTION IN ACCORDANCE WITH THE ELECTRICAL SAFETY REGULATIONS IN FORCE. THE MANUFACTURER DECLINES ALL RESPONSIBILITY FOR DAMAGE TO PERSONS OR PROPERTY RESULTING FROM THE FAILURE TO EARTH THE APPLIANCE OR FROM A DEFECTIVE EARTH CONNECTION.

DURING THE INSTALLATION THE APPLIANCE MUST BE DISCONNECTED FROM THE NETWORK..

Warnings

DO NOT INSTALL THE APPLIANCE IN A PLACE SUBJECT TO FREEZING.

IF THE APPLIANCE IS INSTALLED ON A CARPETED OR COVERED FLOOR, ENSURE THAT THE OPENINGS ON ITS UNDERSIDE ARE NOT OBSTRUCTED.

DO NOT INSTALL THE APPLIANCE NEAR EQUIPMENT WITH HIGH IRRADIATION TEMPERATURES (EG. GAS BURNERS, FIREPLACES, ETC.) AS THEY MAY CAUSE DAMAGE.

IF THE APPLIANCE IS INSTALLED IN A COMPARTMENT ABOVE OR BELOW ANOTHER EQUIPMENT (EG. GAS BURNERS, OVENS, ETC.), READ CAREFULLY THE INSTRUCTIONS PROVIDED BY THE MANUFACTURER OF THE EQUIPMENT. IF THE INSTRUCTIONS OF THE EQUIPMENT DO NOT CONTAIN INFORMATION, CONTACT THE MANUFACTURER OF THE EQUIPMENT TO ENSURE THAT THE APPLIANCE CAN BE INSTALLED ABOVE OR BELOW IT.

BUILDING-IN THE APPLIANCE UNDERNEATH A HOB IS ABSOLUTELY FORBIDDEN.
INSTALL A HOB ON TOP OF A FREE-STANDING APPLIANCE IS ABSOLUTELY FORBIDDEN.

TO ENSURE STABILITY, INSTALL THE APPLIANCE ONLY UNDER CONTINUOUS WORKTOP, SECURELY FIXED TO ADJACENT CABINETS. IF THE APPLIANCE IS INSTALLED IN A HIGH CABINET BOTH, THE APPLIANCE AND THE CABINET, MUST BE ADEQUATELY FIXED.

IF THE APPLIANCE IS NOT BUILT-IN AND IS THEREFORE ACCESSIBLE ON ONE SIDE, THE DOOR HINGE AREA MUST BE COVERED FOR SAFETY REASON (INJURY HAZARD). THE COVERING FIXTURES ARE AVAILABLE AS AN ACCESSORY FROM SPECIALIST DEALERS OR THE AFTER-SALES.

CHECK THAT THE VOLTAGE AND THE FREQUENCY OF THE MAINS MATCH THE RATINGS ON THE NAME PLATE OF THE APPLIANCE.

THE PLUG ON THE SUPPLY CORD AND THE CORRESPONDING SOCKET OUTLET MUST BE OF THE SAME TYPE AND MEET THE REGULATION IN FORCE.
DO NOT USE ADAPTORS OR SHUNT CONNECTIONS IN ORDER TO AVOID THE POSSIBILITY OF OVERHEATING OR BURNING.

THE PLUG OF THE APPLIANCE MUST BE ACCESSIBLE AFTER INSTALLATION.
NEVER DISCONNECT THE PLUG BY PULLING ON THE POWER CORD.

IF THE APPLIANCE IS PROVIDED WITH A PLUGLESS SUPPLY CORD, A CIRCUIT BREAKER PROVIDING A FULL DISCONNECTION IN OVERVOLTAGE PROTECTION CLASS III MUST BE INSTALLED IN AN EASILY ACCESSIBLE POSITION ON THE SUPPLY LINE.

THE APPLIANCE MUST BE CONNECTED TO THE WATER SUPPLY BY NEW HOSES; OLD HOSES MUST NEVER BE REUSED.

Warnings

IMMEDIATELY AFTER INSTALLING THE DISHWASHER, PERFORM A QUICK TEST OF THE APPLIANCE. IF THE DISHWASHER FAILS TO OPERATE CORRECTLY, DISCONNECT IT FROM THE ELECTRICAL POWER SUPPLY AND CALL THE NEAREST TECHNICAL SERVICE CENTRE. **DO NOT ATTEMPT TO REPAIR THE APPLIANCE.**

THIS DISHWASHER MUST BE USED BY ADULTS. USE OF THE APPLIANCE BY CHILDREN AGED FROM EIGHT YEARS AND PERSONS WITH REDUCED PHYSICAL, SENSORY OR MENTAL CAPABILITIES OR LACK OF EXPERIENCE AND KNOWLEDGE IS ONLY PERMITTED UNDER THE SUPERVISION OF A PERSON RESPONSIBLE FOR THEIR SAFETY.

DO NOT ALLOW CHILDREN TO PLAY WITH THE APPLIANCE.

SOME DETERGENTS ARE STRONGLY ALKALINE. AVOID CONTACT WITH THE SKIN AND EYES. DETERGENTS CAN BE EXTREMELY DANGEROUS IF SWALLOWED. THEY CONTAIN SUBSTANCES CAPABLE OF CAUSING PERMANENT DAMAGE TO THE MOUTH AND THROAT, AND EVEN LEADING TO SUFFOCATION. OBSERVE ALL THE SAFETY INSTRUCTIONS ON THE PACKAGING OF THESE PRODUCTS.

KEEP CHILDREN AWAY FROM THE DISHWASHER WHEN THE DOOR IS OPEN. ALWAYS CHECK THAT THE DETERGENT RECEPTACLE IS EMPTY AFTER COMPLETION OF THE WASH CYCLE.

DO NOT DRINK THE WATER RESIDUES WHICH MAY BE PRESENT INSIDE THE DISHES OR APPLIANCE AT THE END OF THE WASHING PROGRAM.

DO NOT INTRODUCE SOLVENTS SUCH AS ALCOHOL OR TURPENTINE IN THE APPLIANCE, AS THIS MAY CAUSE AN EXPLOSION.

DO NOT LOAD DISHES THAT ARE SOILED WITH ASH, WAX OR PAINT.

NEVER LEAVE THE DISHWASHER DOOR OPEN; PEOPLE MIGHT TRIP OVER IT.
LEANING OR SITTING ON THE DISHWASHER DOOR WHEN OPEN MAY CAUSE THE APPLIANCE TO OVERTURN.

KNIVES OR OTHER SHARP-ENDED COOKING TOOLS MUST BE PLACED IN THE CUTLERY BASKET BLADE-DOWN, OR LAID HORIZONTAL IN THE TOP BASKET. TAKE CARE NOT TO CUT YOURSELF AND ENSURE THAT THEY DO NOT PROJECT FROM THE BASKET.

THE DISHWASHER MEETS ALL THE REQUIREMENTS SET OUT BY THE REGULATIONS IN FORCE CONCERNING SAFETY AND ELECTRICAL EQUIPMENT. ANY TECHNICAL CHECKS SHOULD BE CONDUCTED EXCLUSIVELY BY TRAINED AND AUTHORISED TECHNICIANS: **REPAIRS CARRIED OUT BY UNAUTHORISED PERSONS WILL INVALIDATE THE WARRANTY, AS WELL AS POSING A POTENTIAL HAZARD TO THE USER.**

IN THE EVENT OF A FAULT, DISCONNECT THE DISHWASHER FROM THE ELECTRICAL POWER SUPPLY AND SHUT OFF THE WATER TAP.

IN THE EVENT OF DAMAGE TO THE SUPPLY CORD, HAVE IT REPLACED BY THE MANUFACTURER OR AN AUTHORIZED TECHNICAL SERVICE CENTRE.

SOME COMPONENTS ARE LIVE EVEN WITH THE ON/OFF BUTTON IN THE OFF POSITION. BEFORE MAINTENANCE WORK ON THE APPLIANCE, DISCONNECT THE PLUG OR TURN OFF THE MAINS SWITCH IN THE FIXED WIRING

CLEANING AND REGULAR MAINTENANCE OF THE APPLIANCE BY CHILDREN IS ONLY PERMITTED UNDER THE SUPERVISION OF A PERSON RESPONSIBLE FOR THEIR SAFETY.

DO NOT USE STEAM CLEANERS TO CLEAN THE DISHWASHER.

MODELS WITH “AQUASTOP” DEVICE
THE “AQUASTOP” DEVICE PREVENTS FLOODING IN THE EVENT OF A WATER LEAK. WHEN THE “AQUASTOP” DEVICE IS TRIPPED, CALL IN A QUALIFIED TECHNICIAN TO IDENTIFY AND REPAIR THE FAULT.
INSIDE THE “AQUASTOP” WATER INTAKE HOSE, THERE ARE ELECTRICAL PARTS. **DO NOT CUT THE HOSE AND DO NOT ALLOW THE “AQUASTOP” DEVICE TO DROP INTO WATER.** IN THE EVENT OF DAMAGE TO THE “AQUASTOP” WATER INTAKE HOSE, DISCONNECT THE APPLIANCE FROM THE ELECTRICAL SUPPLY AND FROM THE WATER SUPPLY.
WARNING:
THE DEVICE ONLY WORKS IF THE DISHWASHER IS CONNECTED TO THE MAINS POWER SUPPLY.

MODELS WITH INTERNAL LIGHTING
THE LIGHTING SYSTEM OF THE APPLIANCE BELONGS TO RISK GROUP 1 UNDER THE IEC/EN 62471 STANDARD. THIS MEANS THAT THERE IS NO PHOTOBIOLOGICAL RISK IN NORMAL CONDITIONS OF USE.

IN ACCORDANCE TO ART. 26 OF THE LEGISLATIVE DECREE 14 MARCH 2014, NR. 49 “IMPLEMENTATION OF THE DIRECTIVE 2012/19/EU ON WASTE OF ELECTRICAL AND ELECTRONIC EQUIPMENT (WEEE)”.

THE SYMBOL OF A CROSSED OUT WHEELIE BIN ON THE DEVICE OR PACKAGE SHOWS THAT THE PRODUCT MUST BE COLLECTED SEPARATE FROM OTHER WASTE, AT THE END OF ITS SERVICE LIFE. THEREFORE, THE USER HAS TO TAKE ANY EQUIPMENT THAT HAS REACHED THE END OF ITS SERVICE LIFE TO LOCAL WASTE DISPOSAL CENTRES FOR ELECTRICAL AND ELECTRONIC EQUIPMENT WASTE.

AS AN ALTERNATIVE TO THE IDEPENDENT MANAGEMENT, IT IS POSSIBLE TO DELIVER THE EQUIPMENT WHICH HAS TO BE DISPOSED OF TO THE DEALER, AT THE MOMENT OF PURCHASING A NEW EQUIVALENT DEVICE AT THE ELECTRONIC EQUIPMENT DEALERS WITH A SALES AREA OF AT LEAST OF 400 M^2. ALSO, FOR DISUSED DEVICES WITH DIMENSIONS INFERIOR TO 25 CM, FREE DELIVERY TO THE DEALERS IS POSSIBLE, WITH NO PURCHASE OBLIGATION

A PROPER SEPARATE WASTE COLLECTION AND THE CONSEQUENT HEADING OF THE DISUSED DEVICE TOWARDS ITS RECYCLING, TREATMENT AND ENVIRONMENTALLY COMPATIBLE DISPOSAL, CONTRIBUTES IN

PREVENTING ANY POSSIBLE NEGATIVE EFFECTS ON ENVIRONMENT AND HEALTH; ALSO, IT SUPPORTS THE REUSE AND/OR RECYCLE OF THE MATERIALS WHICH COMPOSED THE DEVICE.

OBSOLETE APPLIANCES MUST BE RENDERED UNUSABLE. CUT OFF THE MAINS POWER CORD AFTER UNPLUGGING IT FROM THE WALL OUTLET, AND MAKE SAFE ANY COMPONENTS WHICH MIGHT BE DANGEROUS FOR CHILDREN (LOCKS, DOORS, CABLES, HOSES, ETC.).

The manufacturer declines all responsibility for damage to persons or property resulting from failure to observe the above precautions, from tampering with even a single component of the appliance, or from the use of non original spare parts.

TECHNICAL DATA	
Width	597 ÷ 599 mm
Depth measured flush with the outer edge of the control panel	570 mm
Height (depending on models)	from 818 mm to 888 mm from 850 mm to 888 mm
Capacity	15 Standard place settings
Water supply pressure	min. 0,05 - max. 0,9 MPa (min. 0.5 – max. 9 bar)
Electrical characteristics	See rating plate

2. Installation and hook-up

Remove the polystyrene basket retainers.
Position the appliance in the desired place of installation. The back or sides of the dishwasher may be placed up against walls or other furniture units. If the dishwasher is installed near a heat source, fit the special insulating panel to prevent overheating and malfunction of the appliance. To ensure stability, install integrated or built-under dishwashers only under continuous worktops, and screw them to the adjacent units. To facilitate the installation procedure, the intake and drain hoses can be positioned in any direction; make sure that the hoses are not kinked, crushed or pulled too tightly. Make sure to tighten the locking ring-nut once the pipes have been placed in the direction required. A hole at least 8 cm in diameter is required to allow the power supply cable and pipes to pass. Before putting the dishwasher into its definitive position, turn on the water tap and check that there are no leaks from the tap connection, the dishwasher connection or the hose.

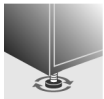

Level the appliance on the floor using the appropriate Allen key to regulate the adjustable feet. This operation is essential for ensuring correct operation of the dishwasher.

Some models are equipped with only one adjustable foot at the rear, which can be adjusted by turning the screw on the lower front part of the appliance.

Building-in a dishwasher underneath a hob is ***absolutely forbidden****.*

Moreover, dishwashers may not be installed *directly touching appliances which are not conventional built-in kitchen appliances (e.g. fireplaces, stoves, etc.).*

When installing the dishwasher in a compartment next to one or more other appliances, it is essential to comply with all the recommendations provided by the appliance's manufacturer (minimum distances, installation procedures, etc.).

For free-standing models only:

- *Installing a hob on top of a free-standing dishwasher is* ***absolutely forbidden****.*
- To build in the dishwasher, the **special kit** must be purchased from authorised dealers or the After-Sales Service.
- The tops of free-standing dishwashers can be removed to allow them to be installed underneath a worktop. **This procedure must be carried out by authorised staff.**

2.1 Water supply connection

Preventing the risk of clogging or damage: *if the water pipe is new or has not been used for a long time, before connecting to the water supply check that the water is clear and free of impurities, to prevent damage to the appliance.*
The dishwasher must always be connected to the water system with new hoses; old or used hoses must never be reused.

CONNECTING TO THE WATER SUPPLY

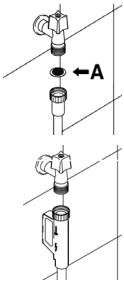

Connect the intake hose to a cold water supply with ¾" gas thread, inserting the filter **A** supplied with the dishwasher. **Take care to screw the hose firmly into place with your hands and then complete by tightening about ¼ of a turn with pliers.**

In dishwashers equipped with the ACQUASTOP device, the filters is already fitted inside the threaded ring.

The dishwasher can also be connected to a hot water supply **not exceeding 60°C**. Supplying the appliance with hot water cuts down the washing time by approximately 20 minutes, but slightly reduces its effectiveness. Make the connection to the domestic hot water supply using the same procedure described for connecting to the cold water supply.

DRAIN CONNECTION

Insert the dishwasher's drain hose into a drain pipe having a diameter of at least **4 cm**, or alternatively, place it inside the kitchen sink using the plastic support provided, taking care not to crush or excessively bend the hose. It is important to prevent the hose from coming loose and falling. For this purpose, the plastic support is equipped with a hole for tying it to the wall or water tap.

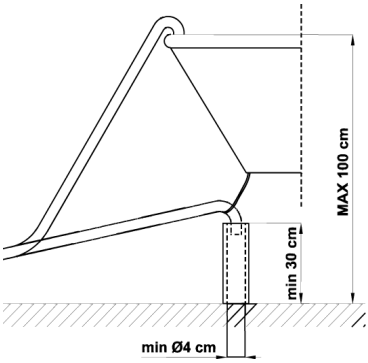

The free end should be positioned at a height of between **30 and 100 cm**, and should never be submerged in water. If a horizontal drain extension hose is used (for a maximum of 3 m) the drain hose can be placed at a maximum height of **85 cm** from the ground.

Class of protection against moisture: IPX0

2.2 Electrical connection and precautions

CHECK THAT THE VOLTAGE AND THE FREQUENCY OF THE MAINS MATCH THE RATINGS ON THE NAME PLATE OF THE APPLIANCE POSITIONED ON THE INNER EDGE OF THE DOOR.

THE PLUG ON THE SUPPLY CORD AND THE CORRESPONDING SOCKET OUTLET MUST BE OF THE SAME TYPE AND MEET THE REGULATIONS IN FORCE.

THE PLUG MUST BE ACCESSIBLE AFTER INSTALLATION.

NEVER DISCONNECT THE PLUG BY PULLING ON THE POWER SUPPLY LEAD.

AFTER CHANGING THE SUPPLY CORD, MAKE SURE THAT THE **BRACKET** WHICH SECURES THE CORD IS FIXED SECURELY

IN PLACE.

DO NOT USE ADAPTORS OR SHUNT CONNECTIONS IN ORDER TO AVOID THE POSSIBILITY OF OVERHEATING OR BURNING.

In the event of damage to the supply cord, have it replaced by the manufacturer or an Authorized Technical Service Centre in order to avoid any risk.

Some components are live even with the ON/OFF button in the OFF position. Before maintenance work on the appliance, remove the plug or turn off the power supply at the wall switch.

3. Description of the controls

3.1 Front panel

All the dishwasher controls are grouped on the upper panel. Switching on, programming, switching off etc. are only possible when the door is open.

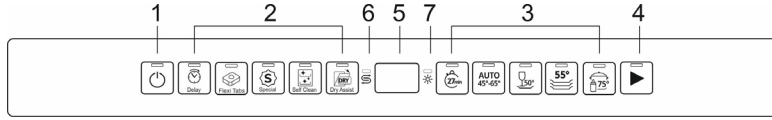

1	ON/OFF BUTTON
2	OPTION BUTTONS/LIGHTS
3	SELECTED PROGRAM BUTTONS/LIGHTS
4	START/PAUSE BUTTON
5	TOP DISPLAY (3 FIGURES)
6	SALT WARNING LIGHT
7	RINSE AID WARNING LIGHT

3.2 The front panel

The front panel includes the **DISPLAY** which provides all information concerning the programmed functions.

8	FRONT DISPLAY
9	DOOR HANDLE

N.B.: symbols and styling are guideline and may vary depending on the model or version of the dishwasher purchased.

Information shown on top display	1:25

Example of screen and information provided

01.05	Estimated wash cycle duration and time remaining
1 h	Delayed start information
E01	Error message **CHECK**
h.3	Softener setting
P0	Program cancellation

Information shown on front display	27min 38° 00:25
End of cycle message	End
Estimated wash cycle duration and time remaining	01: 55
Delayed start information	Start in "X" hours
Error message	Error 01 ……11
Softener setting	h.3
Language selected	IT-EN-FR.....
Program phase icons. They indicate the program status when a program is running	Prewash
	Wash
	Rinse
	Drying

The icon appears if the washing program is cancelled or if there is an error. It does not appear during the drainage phases that are normally part of the washing program, if it is carried out correctly.	

LANGUAGE SELECTION

1-Switch on the dishwasher
2-Select a wash program (not Special Programs)
3-Press and hold the “special” button until the currently selected language appears on the front display.
Press the button again to scroll through the available languages. When the required language appears on the display, select it by simply waiting a few seconds without selecting any other options (the name of the chosen language appears on the display) or switch off the dishwasher by pressing the on/off button.

N.B.:

- With the **door open**, the display **switches off** after about **10 seconds with no commands**.
- With the door closed, if the dishwasher is programmed but **the start is not confirmed** (cycle not confirmed, program interrupted, start not confirmed…) the name **smeg** appears on the display after about **10 seconds.**

WASH PROGRAM SELECTION AND SWITCHING-ON

For selection of the most suitable program for the dishes to be washed, refer to the table below, which specifies the recommended type of wash, also considering the type of dishes and the degree of soiling.

PROGRAMS TABLE

PROGRAMME NUMBER & SYMBOL	LOAD CROCKERY AND CUTLERY	PROGRAM PROGRESS	DURATION	CONSUMPTION	
			MINUTES (1)	WATER LITRES	POWER KWh (1)
1 EXPRESS 27' 27min	Quick wash cycle for lightly soiled dishes, washed immediately after use.	Wash at 38°C Rinse at 50°C	27	6,7	0,70
2 AUTO 45°-65° AUTO 45°-65°	Wash cycle for normally soiled mixed loads such as dishes and pans, even with dried-on residues.	When the "AUTO" program is selected, the dishwasher recognises the type of dirt and automatically adjusts the washing parameters as appropriate.			
3 (*) NORMAL ECO 50°	Crockery and cutlery normally soiled.	Cold prewash Wash at 50°C Cold rinse Rinse at 43°C Dry	220	9,9	0,80
4 REGULAR 55°	Wash cycle for normally soiled mixed loads such as dishes and pans, even with dried-on residues.	Wash at 55°C Cold rinse Rinse at 55°C or 70°C **(2)** Dry	140 **(2)**/ 90	10,5	1,35
5 STERILISE 75°	Intensive wash cycle ideal for plates, pots, pans, cutting boards, feeding bottles. Ideal for baby dishes or if there are allergy sufferers in the family in order to achieve a higher level of hygiene.	Hot prewash Wash at 70°C 2 cold rinses Rinse at 70°C Dry	130	15,4	1,60

* Reference program as per **AS/NZS 2007**.
During the comparative tests the dishwasher shall to be setted as follow:
- **DRY ASSIST option DISABLED**
- At **the end of the cycle** the **door** must be **opened** about **15 cm**.

Only run the soak program with partial loads.

(1) The cycle duration and power consumption may vary according to the water and room temperatures, and the type and amount of dishes.

(2) DRY ASSIST option selected or not selected
DRY ASSIST is activated automatically if the selected program is compatible with the option. It can be disabled by pressing the relative button.

If the dishwasher door is open or not properly closed, the washing cycle will not start.

SPECIAL PROGRAMS (see relevant section for explanation of functioning modes)

PROGRAMME NUMBER E SYMBOL	LOAD CROCKERY AND CUTLERY	PROGRAM PROGRESS	DURATION	CONSUMPTION	
			MINUTES (1)	WATER LITRES	POWER KWh (1)
6 SOAK 27min + S	Recommended for rinsing dishes while waiting for another wash cycle.	Cold prewash	15	3,8	0,02
7 CRYSTAL AUTO 45°-65°+ S	Wash cycle for delicate items, such as wine glasses and lightly soiled fine china. Ideal when you require dazzlingly clean glassware	Wash at 45°C 2 Cold rinses Rinse at 55°C or 70°C **(2)** Dry	125**(2)**/ 75	12,5	1,15
8 ½ LOAD 50° + S	Wash cycle suitable for normally soiled dishes, even with dried-on residues. Ensures maximum noise reduction and is therefore ideal if you wish to run it during the night.	Wash at 65°C Cold rinse Rinse at 55°C or 70°C **(2)** Dry	120**(2)**/ 90	10,5	1,25
9 FULL EXPRESS 60' 55° + S	Quick wash cycle for normally soiled mixed loads such as dishes and pans, even with dried-on residues. Dishes are washed and dried in 60 minutes.	Wash at 65°C Cold rinse Rinse at 70°C Dry	60	9,5	1,40
10 INTENSIVE 75° + S	Intensive wash cycle ideal for plates, pots, pans, cutting boards, feeding bottles. Ideal for baby dishes or if there are allergy sufferers in the family in order to achieve a higher level of hygiene.	Hot prewash Wash at 70°C 2 cold rinses Rinse at 70°C Dry	155	15,5	1,20

The **STERILISE** program terminate with an extra anti-bacteria rinse that ensures a further reduction in the bacteria level. If the temperature falls during this stage of the program (e.g. because the door is opened or due to a power blackout), the **program lights** flash to warn that the anti-bacteria effect is not guaranteed.

(1) The cycle duration and power consumption may vary according to the water and room temperatures, and the type and amount of dishes.

(2) DRY ASSIST option selected.
DRY ASSIST is automatically activated if the selected program is compatible with the option. It can be disabled by pressing the relative button.

If the dishwasher door is open or not properly closed, the washing cycle will not start.

3.3 Washing programs

Before starting a wash program, check that:

- *The water supply tap is **open**.*
- *The softener **container contains regenerating salt**.*
- ***The correct amount of detergent** has been added to the **dispenser**.*
- *The baskets have been **correctly loaded.***
- *The spray arms are able to rotate **freely** and without obstruction.*
- *The dishwasher door **is firmly closed.***

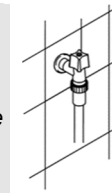

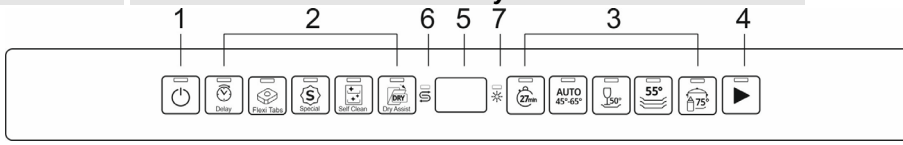

SWITCHING ON
With the door open, press the **ON/OFF** button **on the top panel** to switch on the dishwasher. The LED on the button and the **DISPLAY** light up.

PROGRAMMING
All programming operations are only possible with the door open and the dishwasher switched on.
Select the wash program on the basis of the temperatures and type of soiling stated in the program table.

STARTING THE PROGRAM

- Select the program required (the light comes on) and any options (after selecting the program);
- **Press the start button** (the light comes on and the program's name and estimated time appear on the front panel); the selected program light flashes for a few seconds;
- Close the door: the start light goes out and the program starts.

N.B.: The door must be closed **within about 4 seconds;** otherwise the selected program light stops flashing and the **start button will have to be pressed again** before the door is closed to start the program.
As the program runs, the **front display,** which shows the program phases, will indicate the status of the cycle in progress.

Prewash

Wash

Rinse

Drying

Warning:
during the initial phase of the wash program the spray arms cannot be heard in operation because they start turning about 5 minutes after the start. This is the normal wash cycle sequence.

SPECIAL
Allows you to enable additional programs when selected together with any wash cycle. After having selected the required wash cycle, press the button (the light turns on). It turns off automatically when the cycle has finished.

DRY ASSIST
The door opens automatically, allowing the dishes to be dried perfectly even at low rinse temperatures, and therefore significant energy savings. The door opens automatically by a few centimetres at the end of the wash cycle. The dishwasher remains inactive between the final rinse and the end of the cycle to allow the load to be properly dried (the display shows the time remaining to the end of the cycle). The program is interrupted if the door is opened during this stage. A short beep is emitted and cycle lights 4 and 5 flash to indicate that the cycle has finished. It starts automatically if the selected program is compatible with the option. It can be disabled before starting the program.

There must be sufficient space available for the door to open. The door must not be forced open and closed before the wash cycle has ended completely.

DELAYING THE PROGRAM
Allows you to program the dishwasher cycle to start during the required time period (e.g. night). Press the DELAY button to activate the option. A delay of 1 hour is shown on the display. Pressing the button repeatedly will allow you to select the required delay of up to 24 hours. To cancel the setting, press and hold the button until "0h" appears on the display. The option cannot be selected once the cycle is running. During programming, the selected delay is shown on the upper display. The following message appears on the front display: Start in "X" hours. When the door is closed, the appliance will prewash the dishes, after which the "program delay" set will come into effect.

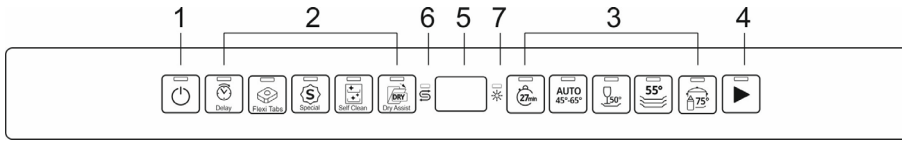

SELF CLEAN
Dishwasher cleaning cycle. The cycle should be started with the machine empty, without dishes. It is recommended to run the program every 2-3 months, using special dishwasher detergents. The light flashes during operation. At the end of the cycle it remains on and cycle lights **4 and 5** flash.
The display (if available) shows “End”.

Flexi Tabs

Specifically for washing with combination detergents in **tablets**, which also contain **salt and rinse aid** (3in1) or other agents such as glass protector, steel rinse aids, etc. (4in1, 5in1…). When this option is selected, salt and rinse aid will not be dispensed even if the relative compartments contain them. If the containers are empty, the **lights** will remain **on.**

If the option is not provided*, we recommend the use of* ***conventional products*** *(separate detergent, salt and rinse aid), because with conventional washing cycles, combined products might create problems such as a white deposit, poor drying results and residues left on dishes.*

For further information, refer to the detergent pack.

IMPORTANT:
when no longer required, the option must be **deactivated** by pressing the relative **button** (the light goes out).

These products **are not suitable** for use with **excessively “hard”** water. If the hardness level set is higher than **H3**, when the option is activated the relative light flashes to indicate that the product is being used incorrectly; the dishwasher **will still work**, but washing results may be **poor**.

CANCELLING THE PROGRAM IN PROGRESS

- **Open the door** (watch out for water splashes)
- Press the **START** button and hold it down until **P0** appears on the top display.
- **Close the door** (00:01 appears on the front display)
- After about 1 minute the program will be cancelled (**"End"** appears on the front display).

CHANGING THE PROGRAM

To change the program in progress, simply open the door (watch out for water splashes) and select a new program. When the door is closed the dishwasher will automatically run the new program.

TO SAVE ENERGY AND PROTECT THE ENVIRONMENT

- ***Always** try to use the dishwasher **with a full load.***
- *Do not wash the dishes in running water.*
- *Use the wash program that is **most appropriate** for each type of load.*
- *Do not perform preliminary rinsing.*
- *If available, connect the dishwasher to a hot water supply up to 60°C.*
- *Use the ENERSAVE option*

TO REDUCE DETERGENT CONSUMPTION AND PROTECT THE ENVIRONMENT

The phosphates contained in dishwasher detergents are harmful to the environment. To avoid using excessive amounts of detergent save on electricity as well, observe the following recommendations:

- ***Sort your dishes**, washing delicate items separately from those more resistant to strong detergents and high temperatures.*
- ***Do not pour** detergent directly onto dishes.*

*If the door has to be opened while washing is in progress, the programme will be interrupted. The programme light will stop flashing and a beeper will signal that the cycle has not been completed. The pause symbol ❚❚ will alternate with the time left to the end of the cycle on the front display. Press the ▶ button and close the door. The programme will continue from the point where it was interrupted. This operation should only be carried out **if strictly necessary**, as it could cause problems in running the programme.*

END OF PROGRAM and SWITCHING OFF

At the end of the program, the dishwasher emits a beep and **"End"** flashes on the **front** display alternating with the name of the program which has just finished. The dishwasher **switches off after about 5 minutes** to save electricity.

The **ON/OFF** button has to be pressed to switch it back on.

REMOVING THE DISHES

At the end of the wash program, wait at least **20 minutes** before removing the dishes, to allow them to cool. To ensure that any drops of water left in the top basket cannot drip onto the dishes still in the lower basket, **it is best** always to empty the lower basket first, followed by the upper basket.

4. Operating instructions

Once the dishwasher has been correctly installed, prepare it for use as follows:

- Adjust the water softening system (in some models only)
- Add salt (in some models only)
- Add rinse aid and detergent

4.1 Using the water softening system **(in some models only)**

The quantity of lime in the water (which indicates its hardness) causes whitish marks on dry dishes, which also tend to lose their shine over time. The dishwasher is equipped with an automatic water softener which removes the substances that cause hardness from the water with the aid of a special regenerating salt.

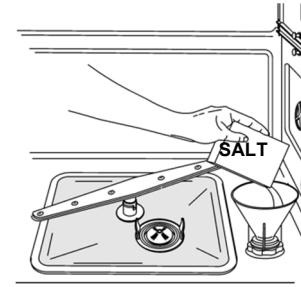

When using water of medium hardness, the salt container should be refilled after approximately **20 wash cycles**. The salt container can hold approximately **1 kg** of salt grains. The container is situated at the bottom of the dishwasher. After removing the lower basket, unscrew the salt container cap by turning it anticlockwise and pour in the salt using the funnel supplied with the dishwasher. Before replacing the cap, remove any salt residues from around the opening.

- *When using the dishwasher for the first time, in addition to the salt it is also necessary to add* ***one litre of water*** *to the container.*
- *Each time the salt container is refilled, make sure that* ***the cap is securely closed****. The mixture of water and detergent must never enter the salt container, as this would compromise the operation of the regeneration system. In this case warranty cover will be forfeited.*
- ***Only*** *use salt specially formulated for domestic dishwashers. If using salt tablets,* ***do not fill*** *the container* ***completely****.*

- ***Do not use table salt**, as it contains insoluble substances which, over time, may damage the water softening system.*
- *The salt container should be refilled when necessary **before starting the wash program**. This way, the excess saline solution will be immediately removed by the water; prolonged presence of salt water inside the tank may lead to **corrosion**.*

***Be careful not to confuse the salt and detergent packages**; adding detergent to the salt container will **damage** the water softening system.*

ADJUSTING THE SOFTENER (in some models only)
(available for all programs except the soak program)

The dishwasher is equipped with an electronic control system which allows the softener setting to be varied to suit the hardness of the water. To set the softener, proceed as follows.

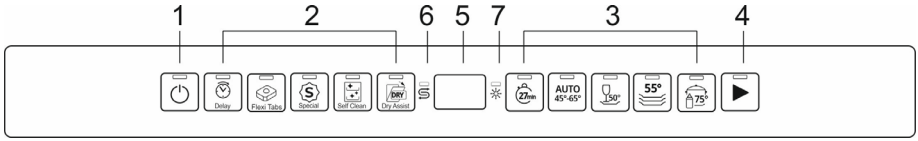

To access the programming environment it is necessary that the dishwasher is switched on and the door is open, at this point you must:

- press the **PROGRAM DELAY** button until the **H** symbol appears on the display, followed by the number currently set (e.g. **H3**)
- press the **PROGRAM DELAY** button the number of times needed to select the right setting level for the hardness of the water (**H0, H1, H2, H3, H4, H5**);

N.B.: after few seconds the appliance exits the parameter setting menu automatically.

WATER HARDNESS TABLE

WATER HARDNESS		SETTING
German degrees (°dH)	French degrees (°dF)	
0 - 6	0 - 11	**h.-0 NO SALT**
7 - 10	12 - 18	**h.-1**
11 - 15	19 - 27	**h.-2**
16 - 21	28 - 37	**h.-3**
22 - 28	38 - 50	**h.-4**
29 - 50	51 - 90	**h.-5**

Contact your local water board for information on the hardness of your water supply. Default settings: **H3 - 16-21°dH** – **28-37°dF**

4.2 Using the rinse aid and detergent dispensers

The detergent and rinse aid dispensers are situated on the inner part of the door: the **detergent dispenser** is on the left, and the **rinse aid dispenser** is on the right.

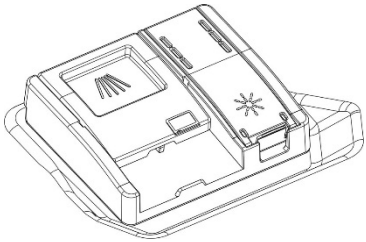

*With the exception of the **SOAK** program, before every washing cycle it is necessary to add the required amount of detergent to the **detergent dispenser**. The rinse aid, on the other hand, should only be added as required.*

ADDING THE RINSE AID

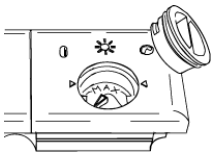

The rinse aid helps the dishes dry faster and prevents the formation of scale deposits and staining; it is automatically added to the water during the final rinse cycle, from the container situated on the inner side of the door.

To add rinse aid:

- Open the dispenser by pressing and lifting the tab on the cover.
- Fill the dispenser with rinse aid. Top up again when the rinse aid indicator light turns on.
- Close the cover, a click indicates when it is closed.
- Use a cloth to remove any spillage of rinse aid which might lead to the formation of excess foam.

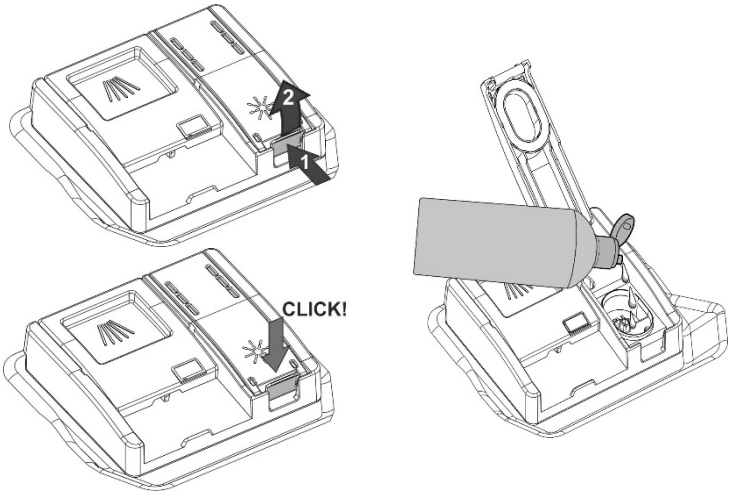

ADJUSTING THE RINSE AID DISPENSER MODE

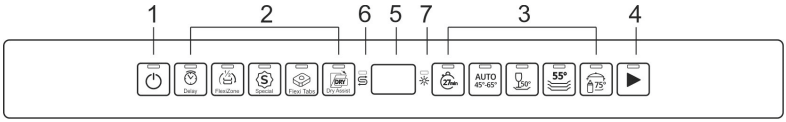

To access the programming environment it is necessary that the dishwasher is switched on and the door is open, at this point you must:

- press the **PROGRAM DELAY** button until the **b** symbol appears on the display, followed by the number currently set (e.g. **b3**)
- Then press the **PROGRAM DELAY** button button several times to select the required dosage according to the following table:

RINSE AID ADJUSTMENT TABLE			
0 – not dispensed	**b0**	All indicator lights off	END
Minimum. 2 ml	**b1**	One indicator light on	END
3 ml	**b2**	Two indicator lights on	END
4 ml	**b3**	Three indicator lights on	END
5 ml	**b4**	Four indicator lights on	END
Maximum. 6 ml	**b5**	Five indicator lights on	END

Default settings: **b4 - 5 ml**
After carrying out the adjustment or displaying the current setting, if you do not touch the button for a few seconds the dishwasher will automatically exit from adjustment mode and return to the standard operating mode.

- *The amount of rinse aid must be **increased** if the washed dishes appear dull or feature circular stains.*
- *If, on the other hand, the dishes are sticky or have white streaks, it is necessary to **reduce** the rinse aid setting.*

ADDING THE DETERGENT

To open the detergent dispenser cover, lightly press button **P**. Add the detergent or tablet and close the cover by sliding it until it stops, indicated by a click.
The dispenser will open automatically during the wash cycle.
Only add the detergent (also in tablet form) if the dispenser is dry

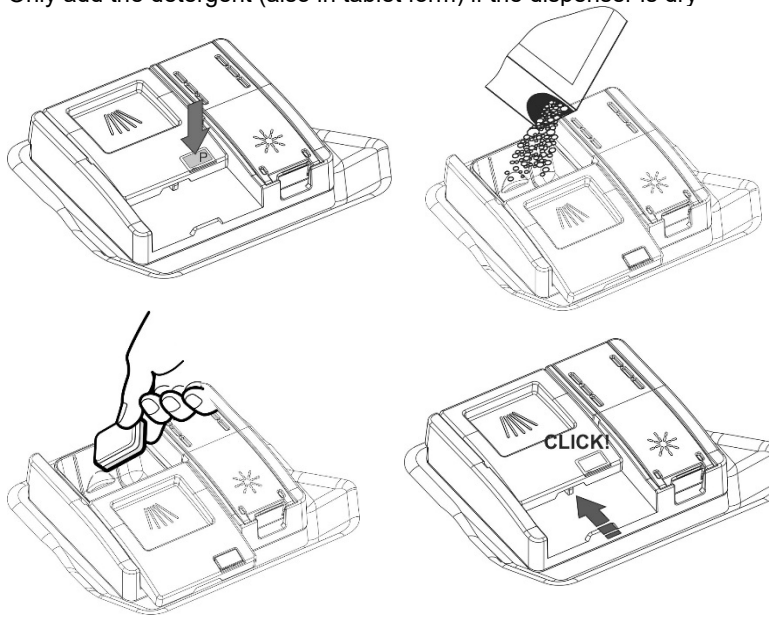

- *When a program with hot prewash is selected (see program table), extra detergent must be placed in the cavity **G/H** (depending on models).*
- *Use **only** detergents specially formulated for dishwashers. The detergent packs must be sealed and stored in a dry place to prevent the formation of lumps which may negatively affect washing results. Once opened the detergent packs should not be kept for too long, otherwise the detergent loses its effectiveness.*
- *Do not use detergents for washing dishes by hand because they may affect the operation of the dishwasher.*
- *Add the correct amount of detergent. An insufficient amount of detergent will result in a partial removal of dirt from the dishes, whereas an excessive amount is wasteful and does not improve the washing results.*
- *For the safeguarding of the environment we recommend the use of **phosphate- and chlorine free** detergents.*

The introduction of detergent into the rinse aid dispenser, even in liquid form, will damage the dishwasher.

4.3 General warnings and recommendations

Before using the dishwasher for the first time, it is advisable to read the following recommendations concerning dish types to be washed and their loading.
There are generally no constraints on the washing of domestic dishes, but in certain cases it is necessary to take their characteristics into account.

Before loading the dishes into the baskets it is necessary to:

- *remove coarse food remains: e.g. bones, fish-bones, etc. which may clog the filter or damage the wash pump.*
- *soak any pots or pans with burnt-on food remains on the bottom to facilitate removal, then load them into the LOWER BASKET.*

There is no need to pre-wash the dishes under running water before loading them into the baskets since this only wastes water.

Correct loading of the dishes helps ensure optimal washing results.

WARNING!

- *Make sure that the dishes are securely in place so that they cannot tip over or obstruct the rotation of the spray arms during the washing cycle.*
- *Do not place very small objects in the baskets as these could fall and obstruct the spray arms or the wash pump.*
- *Containers such as cups, bowls, glasses and pots should always be loaded with the opening facing downwards and with any cavities at an angle, to allow the water to drain out.*
- *Do not stack dishes or place them in such a way that they cover one other.*
- *Do not place glasses too close together because they may knock against each other and break, or there might be staining at the point where they touch.*

MAKE SURE that the items being washed are dishwasher-safe.

Items which are not dishwasher-safe:

- ***Wooden dishes, pots or pans:*** *these may be damaged by the high washing temperatures.*
- ***Handcrafted items:*** *these are rarely suitable for washing in a dishwasher. The relatively high water temperatures and the detergents used may damage them.*
- ***Plastic dishes:*** *heat resistant plastic dishes must be washed in the upper basket.*
- ***Dishes and objects in copper, tin, zinc or brass:*** *these tend to stain.*
- ***Aluminium dishes:*** *items made from anodised aluminium may lose their colour.*
- ***Silverware:*** *silver items may stain.*
- ***Glass and crystal:*** *in general, glass and crystal objects can be washed in the dishwasher. However, certain types of glass and crystal may become dull and lose their clearness after many washings. Therefore, for these items we recommend using the least aggressive program available.*
- ***Decorated items:*** *the decorated objects available on the market are generally able to withstand washing in the dishwasher, although the colours may fade after a great many washes. If in doubt as to the fastness of the colours, it is advisable to wash just a few items at a time for approximately one month.*

4.4 Using the baskets

The dishwasher has a capacity of **15 place-settings**, including serving dishes.

LOWER BASKET

The lower basket receives the full force of the lower spray arm, and should therefore be used for the “toughest” items with a heavier degree of soiling. All types and combinations of loads are permitted, provided that the dishes, pots and pans are arranged with all the soiled surfaces exposed to the water jets coming from the bottom.

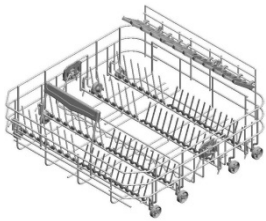

Depending on the models, the basket may be equipped with some or all of the following accessories:

Plate racks, which can be laid flat when not in use (e.g. to accommodate pans, bowls, etc.). To stow the racks flat, pull them upward and turn them towards the inside of the basket.

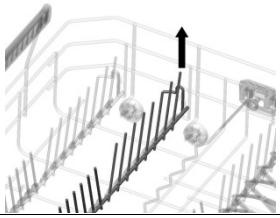

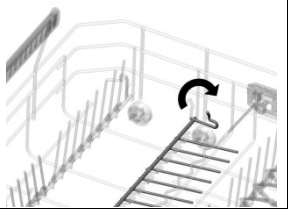

Anti-drip inserts which improve the drying of dishes. They may be supplied fitted on the basket or in the accessories bag; in this case, to use them, simply fit them into place as shown.

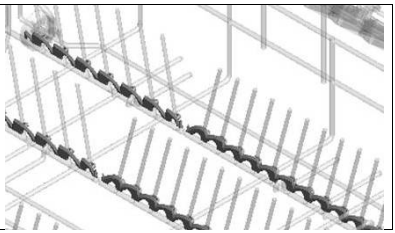

Supports for cups and long objects (ladles, spoons, etc.), in the rear; can be tipped to the vertical position when not in use.

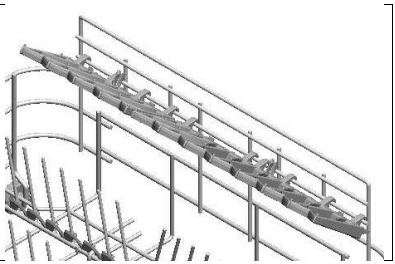

Glass holder. Support for long-stem glasses. When lifted out of the stowed position (0) it snaps into three different positions (1-2-3).

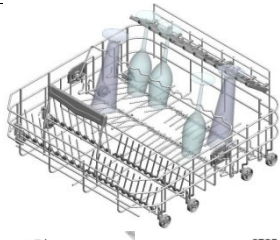

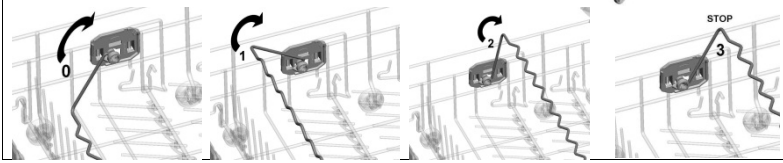

2-position fold-down supports (1-2). In position **1** (vertical) they can be used to take plates, while in position **2** (slanted) they provide support for long-stem glasses which will be held in place by the **glass holder**. Adjustment: raise point **P** as shown until the support turns into position **2**.

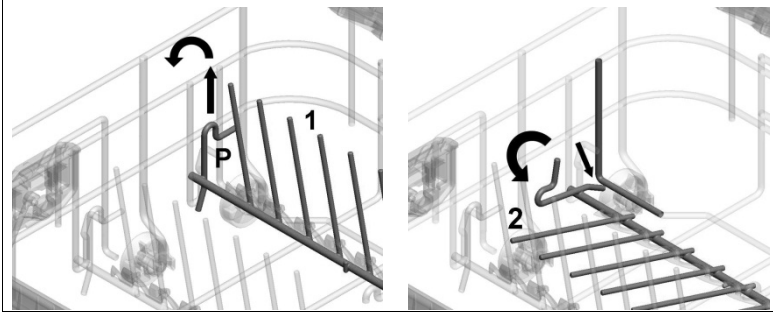

To lie completely flat, lift the end and turn it towards you so that the retainer **F** rotates into place above point **S**.

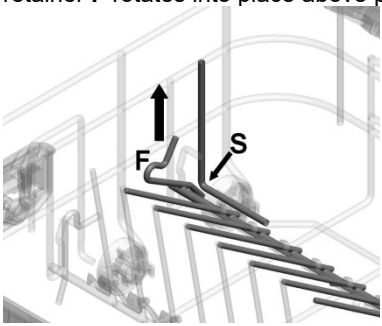

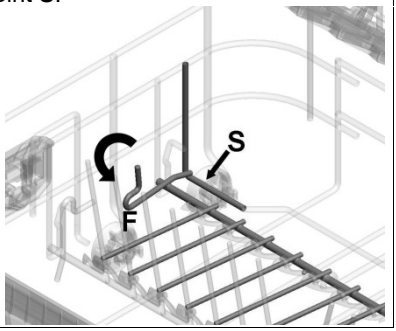

LOADING THE LOWER BASKET

Carefully load flat plates, soup plates, dessert and serving dishes, positioning them vertically. Pots, pans and their covers must be loaded upside down. When loading soup plates and dessert bowls, be sure to leave a gap between them.

Loading examples:

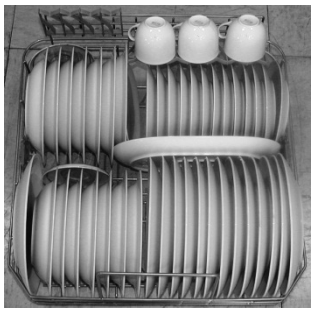

UPPER BASKET

The upper basket should be loaded with small or medium-sized items such as glasses, small plates and saucers, tea or coffee cups, shallow bowls and light objects. If the upper basket is used in the lowermost position, it can also be loaded with serving dishes, provided they are only lightly soiled.

LOADING THE UPPER BASKET

Load plates facing forward; cups, bowls etc. must always be facing downwards. The left side of the basket can be loaded with cups and glasses on two levels. In the centre section, plates and saucers can be loaded vertically into the supports provided.

Loading examples:

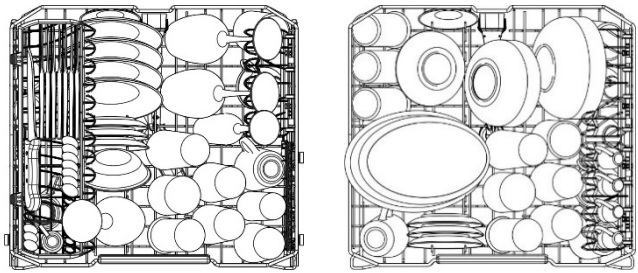

CUTLERY BASKET

The basket is suitable for all types of cutlery, except long items that may **interfere** with the upper spray arm. The cutlery should be arranged in the spaces in the upper racks to allow the water to pass effectively between the items.

Forks and spoons should be positioned with the **handle facing downwards**, taking care not to injure yourself with the prongs of the forks.

Knives should be placed in the tray on the upper rack or in the cutlery drawer, if present (depending on the model), otherwise position them with the **handles facing upwards**.

Ladles, wooden spoons and kitchen knives can be placed on the upper rack, **making sure that the blades of the knives do not protrude from the basket.** The upper racks can be opened in order to insert, for example, small items.

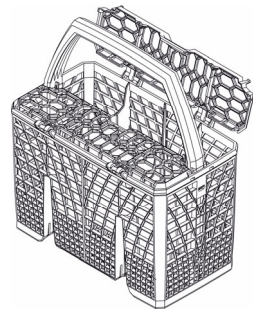

The cutlery basket slides across the dishwasher and can be **placed in any position** to allow optimal use of the space in the bottom basket.

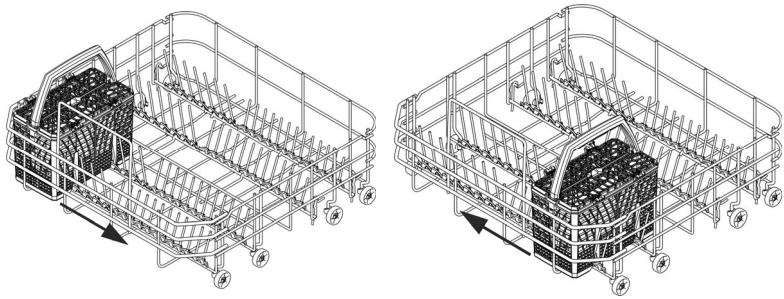

FLEXI DUO TOP RACK

This comprises **two independent** sliding, pull-out tray racks for easier loading/unloading of cutlery. Various loading systems and configurations are possible. For example, **tea cups** can be loaded with the **right-hand** rack set in the **low position,** while the left-hand rack or both can be removed to allow l**arge dishes** to be put in the **top basket.**

In order to position the right hand basket in a low position, the upper basket has to be adjusted so that it is in the lowest position (see “adjusting the upper basket).

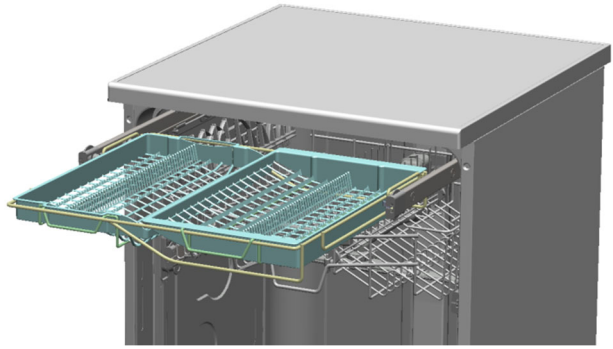

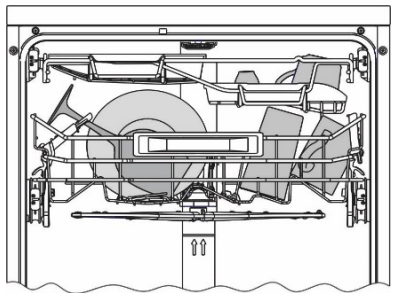

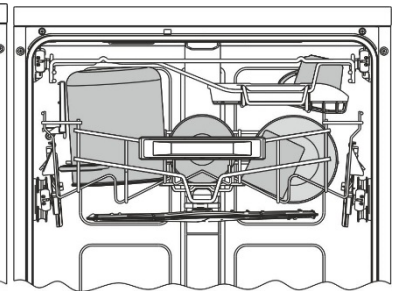

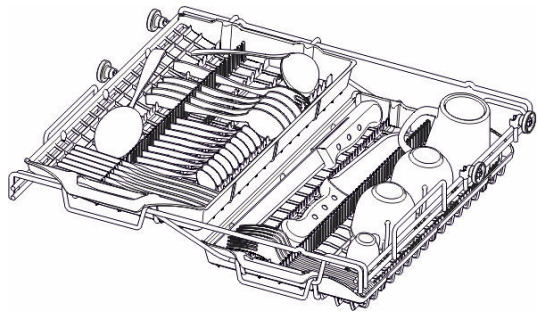

EXAMPLES OF LOADING FOR INTENSIVE DIRT

13 Standard place setting
FLEXI DUO TOP RACK (on some models only)

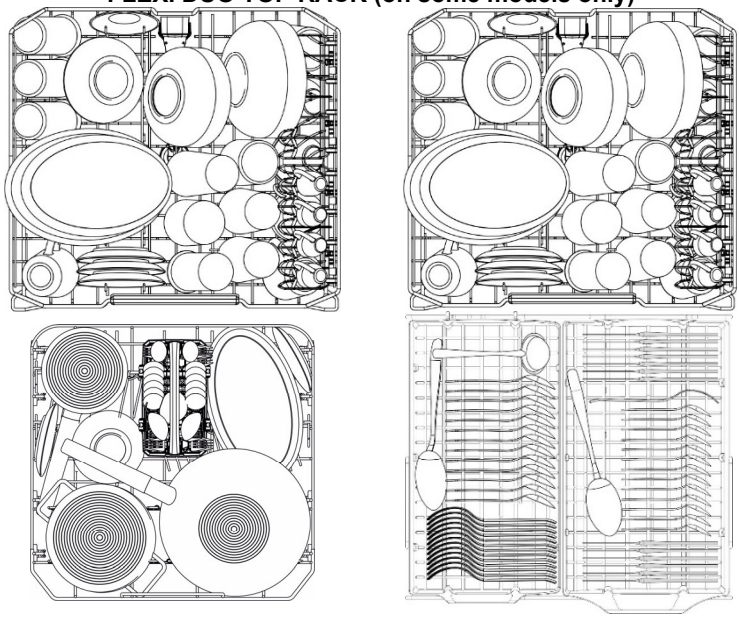

If the bottom basket inserts are of the fold-down type, they should be laid flat for easier loading.

UPPER BASKET EQUIPMENT
(depending on the model)

Cutlery tray
For knives, spoons (tea and dessert) and long objects. The ends are designed to hold long stemmed glasses.
- It can be removed by pressing and pushing the release levers **(B)** at the same time.
- It has to be lowered if the upper basket is in the topmost position. Press the catches **(G)** simultaneously.

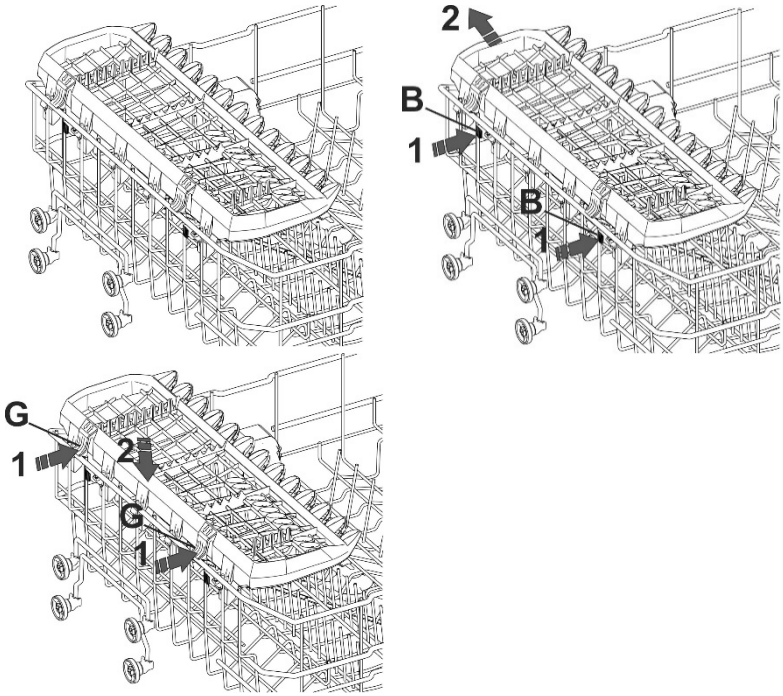

Fold-down shelves

For mugs, cups and long objects. The ends are designed to hold long stemmed glasses

When not used they can be moved to a vertical position (until a click is heard).

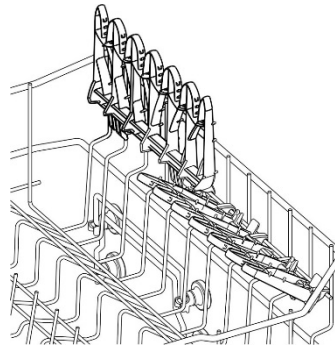

Shelves with expandable wings

For small objects, mugs and cups.

They can be used either closed or open (pull the upper, sliding part). To close them, press the release device (S) and slide them downwards.

The ends are designed to hold long stemmed glasses (even when closed).

When not used they can be moved to a vertical position (until a click is heard).

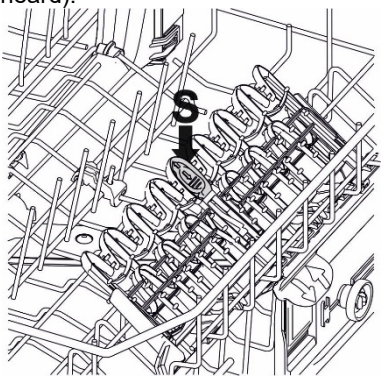

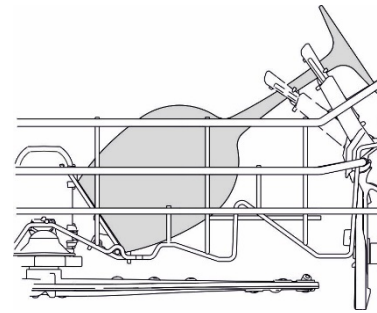

Fold-down tines

These can be secured in a vertical position, resting on the bottom of the basket if unused, or placed in an intermediate position, as required.
The single tine on the right is ideal for supporting long stemmed glasses.

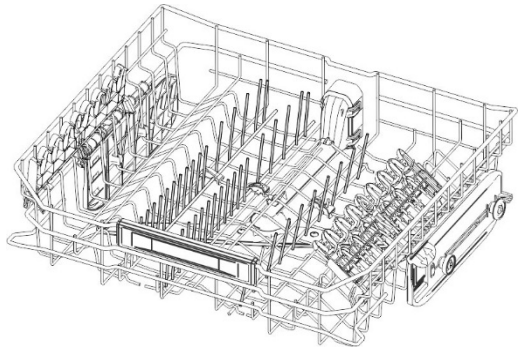

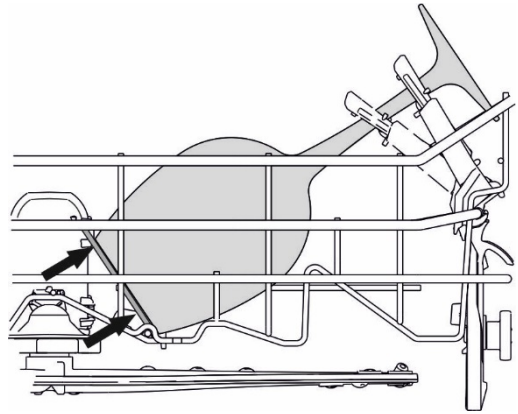

ADJUSTING THE UPPER BASKET

The height of the top basket can be adjusted to allow large dishes or pans to be placed in the bottom basket.
The adjustment procedure may be type **A** or **B**, depending on the dishwasher model purchased.

Version A: pull-out with adjustment in **two positions.**

- Pull out both the basket guides.
- Remove the stops, first releasing them as shown in the diagram.
- Pull out the basket.
- Fit the upper or lower pair of wheels into the guide, depending on the setting required;
- Return the stops to their original position**.**

The left hand and right hand sides of the basket **must always be set at the same height**.

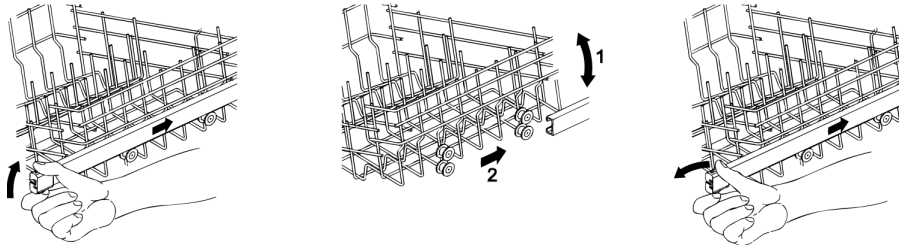

Version B: with adjustment in **three positions** on both sides.
The sides of the basket **must always be set at the same height**.

- Raise the basket by pulling on the top edge **(1)**, to the first or second catch depending on the height required.
- To lower the basket, first release it by pulling the release lever **(2)**.

Adjustment is also possible with the basket loaded, but in this case when lowering the basket it should be held steady with one hand to avoid knocking the dishes.

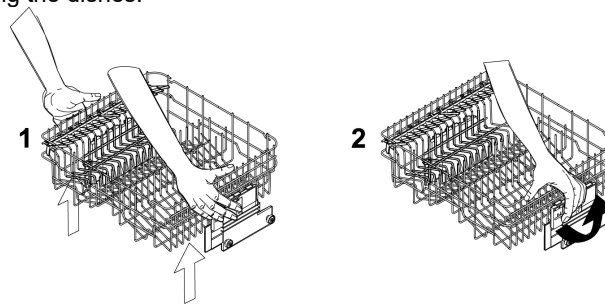

5. Cleaning and maintenance

Before carrying out any work, always unplug the appliance from the electrical supply or switch off the all-pole disconnection device.

5.1 General warnings and recommendations

Avoid the use of acidic or abrasive detergents.

Clean the outer surfaces and door-lining of the dishwasher regularly using a soft cloth moistened with water or with a normal detergent suitable for painted surfaces. Clean the door gaskets with a damp sponge. Periodically (once or twice a year) it is advisable to clean the tank and gaskets, using a soft cloth and water to remove any deposits.

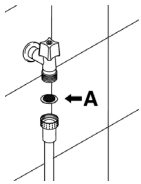

CLEANING THE WATER INTAKE FILTER
The water intake filter **A** located at the outlet of the water supply tap needs to be cleaned periodically.
After having closed the water supply tap, unscrew the end of the water intake hose, remove the filter **A** and clean it delicately under running water. Reassemble filter **A** in its seat and carefully screw the water intake hose back into position.

CLEANING THE SPRAY ARMS
The spray arms can be easily removed for periodic cleaning of the nozzles, to prevent possible clogging. Wash them under running water and carefully replace them in their seats, **checking that their rotary movement is in no way impeded**.

- To remove the **upper** spray arm, unscrew locking ring **R**.
- To remove and clean the **planetarium** sprayer follow the instructions provided.

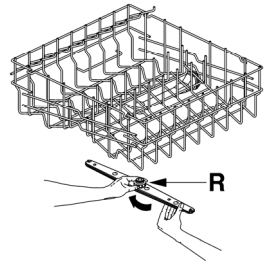

PLANETARIUM

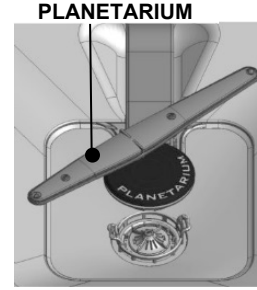

CLEANING THE FILTER UNIT

- It is advisable to periodically inspect the centre filter and, if necessary, to clean it.
- remove the planetarium sprayer follow the instructions provided.
- push the centre filter **D** from the underside to remove it from the micro-filter:
- separate the two parts which make up the plastic filter by pressing the body of the filter in the zone shown by the arrows;
- remove the centre filter by lifting it upwards.

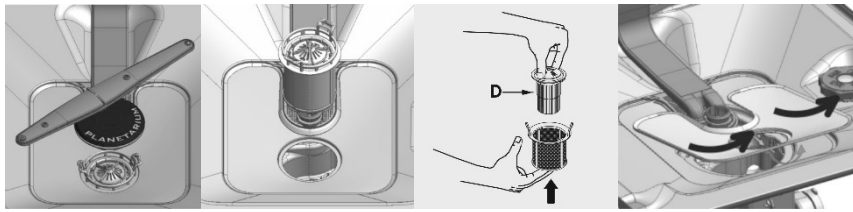

GENERAL WARNINGS AND RECOMMENDATIONS FOR CORRECT MAINTENANCE:

- *The filters should be cleaned **under running water** using a stiff brush.*
- ***When removing the filter**, take care that there are no food residues on it. If any residues fall into the washing pit they might block hydraulic components, or foul the spray arm nozzles.*
- *It is essential to **thoroughly clean the filters** according to the above instructions: the dishwasher cannot function if the filters are clogged.*
- ***Carefully replace** the filters in their seats, to avoid damaging the wash pump.*

PROLONGED DISUSE:

- *Run the soak program twice in succession.*
- ***Unplug** the power cord from the socket.*
- ***Leave the door slightly open**, in order to prevent the formation of unpleasant odours inside the washing tank.*
- ***Fill the rinse aid dispenser**.*
- ***Shut off the water supply tap.***

BEFORE STARTING THE DISHWASHER AFTER PROLONGED DISUSE:

- *Check that there are no deposits of sludge or rust inside the water pipe: if there are, allow the water to run from the water supply tap for a few minutes.*
- ***Plug the power cord** back into the socket.*
- ***Reconnect the water intake hose and open the tap again.***

TROUBLESHOOTING MINOR PROBLEMS

In some cases it is possible to remedy minor problems by referring to the following instructions:

If the program fails to start, check that:

- *the dishwasher is connected to the electrical power supply;*
- *there is no power failure;*
- *the water tap is open;*
- *the dishwasher door is properly closed.*
- *the door does not close:*
  - the lock has been triggered; close the door with greater force
  - regulate the catch of the lock on the door to its maximum adjustment using the central plastic screw.

If water remains inside the dishwasher, check that:

- *the drain hose is not kinked;*
- *the drain siphon is not obstructed;*
- *the dishwasher filters are not clogged.*

If the dishes are not being cleaned properly, check that:

- *the correct amount of detergent has been added;*
- *there is regenerating salt inside the special container;*
- *the dishes are being loaded correctly;*
- *the selected program is suitable for the dish types and their degree of soiling;*
- *all the filters are clean and positioned correctly;*
- *the spray arm nozzles are not obstructed;*
- *there is no object obstructing the rotation of the spray arms.*

If the dishes fail to dry or remain dull, check that:

- *there is rinse aid inside the special container;*
- *the rinse aid dispenser setting is correct;*
- *the detergent used is of good quality and has not lost its effectiveness (for example, through incorrect storage, with the box left open).*
- *Non-dry synthetic dishes. Synthetic material has a lower heat storage capacity and is therefore harder to dry.*

If the dishes show signs of streaking, staining, etc., check that:

- *the rinse aid dispenser setting is not too high.*

If there are visible traces of rust inside the tank:

- *the tank is made of steel, and therefore any rust marks are due to external elements (fragments of rust from the water pipes, pots, cutlery, etc.). Special products are commercially available to remove such marks;*
- *check that the amount of detergent being used is correct. Certain detergents can be more corrosive than others.*
- *check that the cap of the salt container is securely closed, and that the water softening setting is correct.*

If the door does not close:
1 - Check the position of the door lock catch **(D)**
2 - **If necessary**, raise it by adjusting the plastic screw **(V)** next to the catch.
3 - Check the condition of the lock hook; if it has not triggered (reference **N**), the door opens and closes normally. **If it has triggered** (reference **S**), close the door with force until it resets; open and close the door.

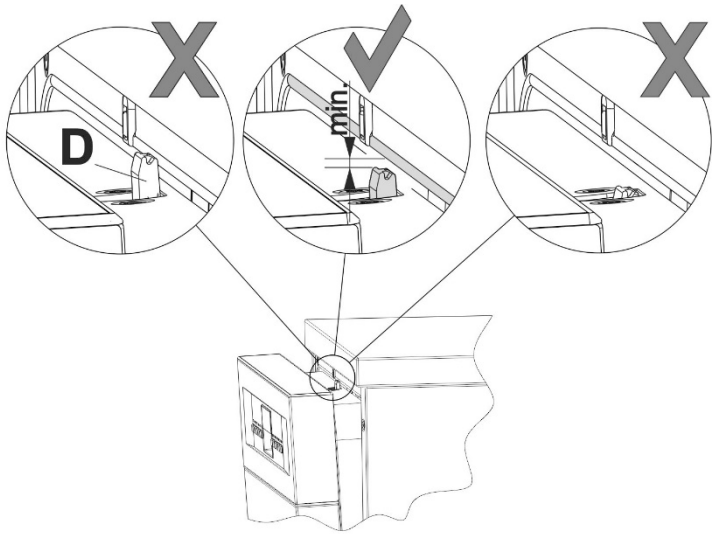
D
min.

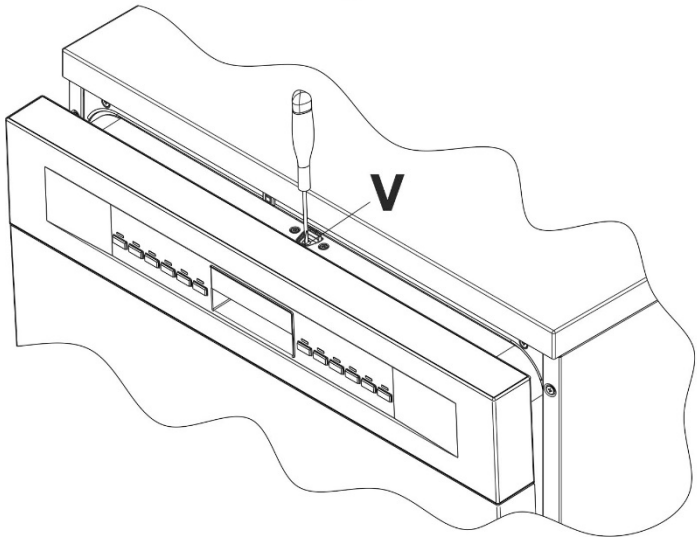
V

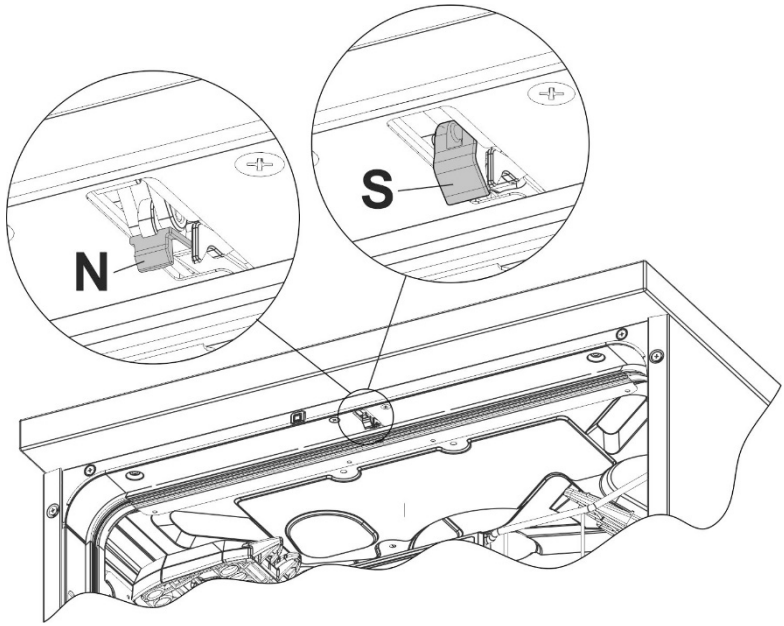

If after following the above troubleshooting instructions the problem persists, call the nearest After-Sales Centre.

WARNING: any operations performed on the appliance by unauthorised persons are not covered by the warranty and shall be paid for by the user.

6. Troubleshooting

The dishwasher has an autodiagnosis system capable of detecting and indicating a preset series of possible malfunctions.

TABLE OF MALFUNCTIONS DETECTED BY THE AUTODIAGNOSIS SYSTEM

FAULT	DESCRIPTION
Error 01	Anti-flooding system tripped (where installed).
Error 02	The system that limits the water level in the dishwasher has been tripped.
Error 03	The dishwasher is unable to heat the water.
Error 04	Temperature sensor disconnected.
Error 05	The dishwasher is unable to fill with water
Error 06	The dishwasher is not able to pump out the water from the tank.
Error 07	The dishwasher is not able to measure the amount of water loaded accurately.
Error 08	Anomaly in the system which distributes water to the baskets.
Error 09	Water intake system malfunction.
Error 11	Washing pump failure

If an alarm situation occurs, the appliance interrupts the program in progress and signals a fault.

- Alarms **01, 02, 03, 04, 08** and **09** interrupt the current program immediately.
- Alarms **05** and **06** interrupt the current program; once the problem is solved, the program will finish running.
- Alarm **07** is displayed at the end of the cycle, which however is completed since the problem does not interfere with operation of the dishwasher.
- **Error 11:** Contact the after-sales service.

To reset an alarm:

- open and close the door, or turn the machine off and on again. The dishwasher can now be programmed again.

If the malfunction persists, contact your authorised Service Centre.