Contents

1 Instructions 70

1.1 General safety instructions 70
1.2 Appliance purpose 75
1.3 Manufacturer's liability 75
1.4 This user manual 75
1.5 Identification plate 75
1.6 Disposal 75
1.7 How to read the user manual 76

2 Description 77

2.1 General Description 77
2.2 Hob 78
2.3 Control panel 79
2.4 Other parts 79
2.5 Available accessories 80

3 Use 82

3.1 Instructions 82
3.2 First use 83
3.3 Using the accessories 83
3.4 Using the hob 86
3.5 Using the oven 92
3.6 Cooking advice 100
3.7 Special functions 102
3.8 Automatic programs 105
3.9 Secondary menu 109
3.10 Using the storage compartment 112

4 Cleaning and maintenance 113

4.1 Instructions 113
4.2 Cleaning the glass ceramic hob 113
4.3 Cleaning the door 115
4.4 Cleaning the oven cavity 117
4.5 Extraordinary maintenance 121

5 Installation 124

5.1 Positioning 124
5.2 Electrical connection 131
5.3 Instructions for the installer 134

TRANSLATION OF THE ORIGINAL INSTRUCTIONS

We advise you to read this manual carefully, which contains all the instructions for maintaining the appliance's aesthetic and functional qualities.

For further information on the product: www.smeg.com

EN

1 Instructions

1.1 General safety instructions

Risk of personal injury

- During use the appliance and its accessible parts become very hot. Never touch the heating elements during use.
- Protect your hands by wearing oven gloves when moving food inside the oven.
- Never try to put out a fire or flames with water: Turn off the appliance and smother the flames with a fire blanket or other appropriate cover.
- This appliance may be used by children aged at least 8 and by people of reduced physical, sensory or mental capacity, or lacking in experience in the use of electrical appliances, provided that they are supervised or instructed by adults who are responsible for their safety.
- Children must not play with the appliance.
- Keep children under the age of eight at a safe distance unless they are constantly supervised.
- Keep children under the age of 8 away from the appliance when it is in use.
- Cleaning and maintenance must not be carried out by unsupervised children.
- Be aware of how rapidly the cooking zones heat up. Do not place empty pans on the heat. Danger of overheating.
- Fats and oils can catch fire if they overheat. Do not leave the appliance unattended while preparing foods containing oils or fats. If fats or oils catch fire, never put water on them. Place the lid on the pan and turn off the relevant cooking zone.

- The cooking process must always be monitored. A short cooking process must be continuously monitored.
- Do not place metal objects, such as dishes or cutlery, on the hob surface during use as they may overheat.
- Do not insert pointed metal objects (cutlery or utensils) into the slots in the appliance.
- Do not pour water directly onto very hot trays.
- Keep the oven door closed during cooking.
- If you need to move food or at the end of cooking, open the door 5 cm for a few seconds, let the steam come out, then open it fully.
- Do not open the storage compartment (where present) when the oven is on and still hot.
- The items inside the storage compartment could be very hot after using the oven.
- Do not use or store flammable materials in the storage compartment (where applicable) or near the appliance.
- Do not use aerosols in the vicinity of this appliance whilst it is in use.
- Switch off the appliance immediately after use.
- Do not modify this appliance.
- Always use any necessary/ required personal protective equipment (PPE) before performing any work on the appliance (installation, maintenance, positioning or movement).
- Before performing any work on the appliance, switch off the power supply.
- Have qualified personnel carry out installation and assistance interventions according to the standards in force.
- Do not try to repair the appliance yourself or without the intervention of a qualified technician.
- Do not pull the cable to remove the plug.
- If the power supply cable is damaged, contact technical support immediately and they will replace it.

Risk of damaging the appliance

- Do not use abrasive or corrosive detergents (e.g. scouring powders, stain removers and metallic sponges) on glass parts.
- Use wooden or plastic utensils.
- Racks and trays should be inserted as far as they will go into the side guides. The mechanical safety locks that prevent them from being removed must face downwards and towards the back of the oven cavity.
- Do not seat on the appliance.
- Do not use steam jets to clean the appliance.
- Do not obstruct ventilation openings and heat dispersal slots.
- Never leave the appliance unattended during cooking operations where fats or oils could be released, as these could then heat up and catch fire. Be very careful.
- Never leave objects on the cooking surface.
- Do not use the appliance to heat rooms for any reason.
- Do not spray any spray products near the oven.
- Do not use plastic cookware or containers when cooking food.
- Do not put sealed tins or containers in the oven.
- Remove all trays and racks which are not required during cooking.
- Do not cover the bottom of the oven cavity with aluminium or tin foil sheets.
- Do not place pans or trays directly on the bottom of the oven cavity.
- If you wish to use greaseproof paper, place it so that it will not interfere with the hot air circulation inside the oven.
- Do not use the open door to rest pans or trays on the internal glass pane.
- Cooking vessels or griddle plates should be placed inside the perimeter of the hob.
- All pans must have smooth, flat bottoms.

- If any liquid does boil over or spill, remove the excess from the hob.
- Take care not to spill acid substances such as lemon juice or vinegar on the hob.
- Do not put empty pans or frying pans on switched on cooking zones.
- Do not use steam jets to clean the appliance.
- Do not use rough or abrasive materials or sharp metal scrapers.
- Do not use cleaning products containing chlorine, ammonia or bleach on parts made of steel or that have metallic surface finishes (e.g. anodizing, nickel- or chromium-plating).
- Do not use abrasive or corrosive detergents (e.g. scouring powders, stain removers and metallic sponges) on glass parts.
- Do not wash removable parts such as the hob pan support grids, flame-spreader crowns and burner caps in the dishwasher.

Installation

- This appliance **must not be installed** in a boat or caravan.
- The appliance must not be installed on a pedestal.
- Position the appliance into the cabinet cut-out with the help of a second person.
- Never use the oven door to lever the appliance into place when fitting.
- Avoid exerting too much pressure on the oven door when open.
- Do not use the handle to lift or move the appliance.
- To avoid potential overheating, the appliance must not be installed behind a decorative door or a panel.
- Have the electrical connection performed by authorised technical personnel.
- The appliance must be connected to earth in compliance with electrical system safety standards.

- Use cables withstanding a temperature of at least 90°C.
- The tightening torque of the screws of the terminal supply wires must be 1.5 - 2 Nm.

For this appliance

- After use, switch off the plates. Never rely solely on the cookware detector.
- Supervise children carefully as they cannot readily see the residual heat indication. After use the cooking zones remain hot for a certain period of time even if they have been turned off. Keep children away from the cooking zones.
- The glass ceramic surface is highly resistant to impact. However, prevent hard, solid objects from falling on the cooking surface as they may cause it to break if they are sharp.
- Do not use the glass ceramic cooking surface as a support surface.
- If cracks or fissures form, or if the glass ceramic cooking surface breaks, turn off the appliance immediately. Disconnect the power supply and call Technical Support.
- Ensure that the appliance is switched off before replacing the bulb.
- Do not rest any weight or sit on the open door of the appliance.
- Take care that no objects are stuck in the doors.
- People who have pacemakers or other similar devices fitted must make sure that the operation of these devices is not jeopardised by the inductive field, whose frequency range is between 20 and 50 kHz.
- In conformity with the provisions regarding electromagnetic compatibility, the electromagnetic induction cooking hob comes under group 2 and class B (EN 55011).

1.2 Appliance purpose

- This appliance is intended for cooking food in the home environment. Every other use is considered improper.
- The appliance is not designed to operate with external timers or with remote-control systems.

1.3 Manufacturer's liability

The manufacturer declines all liability for damage to persons or property caused by:

- Use of the appliance other than that specified
- Failure to comply with the instructions in the user manual
- Tampering with any part of the appliance
- The use of non-original spare parts.

1.4 This user manual

This user manual is an integral part of the appliance and must therefore be kept in its entirety and within the user's reach for the whole working life of the appliance.

Read this user manual carefully before using the appliance.

1.5 Identification plate

The identification plate bears the technical data, serial number and brand name of the appliance. Do not remove the identification plate for any reason.

1.6 Disposal

This appliance must be disposed of separately from other waste (Directives 2002/95/EC, 2002/96/EC, 2003/108/EC). The appliance does not contain substances in quantities sufficient to be considered hazardous to health and the environment, in accordance with current European directives.

To dispose of the appliance:

- Cut the power supply cable and remove it along with the plug.

Power voltage

Danger of electrocution

- Disconnect the mains power supply.
- Unplug the appliance.

- Deliver the appliance to the appropriate recycling centre for electrical and electronic equipment waste, or return it to the retailer when purchasing an equivalent product, on a one for one basis.

Our appliances are packaged in non-polluting and recyclable materials.

- Deliver the packing materials to the appropriate recycling centre.

Plastic packaging
Danger of suffocation

- Do not leave the packaging or any part of it unattended.
- Do not let children play with the plastic bags.

1.7 How to read the user manual

This user manual uses the following reading conventions:

Instructions

General information on this user manual, on safety and final disposal.

Description

Description of the appliance and its accessories.

Use

Information on the use of the appliance and its accessories, cooking advice.

Cleaning and maintenance

Information for proper cleaning and maintenance of the appliance.

Installation

Information for the qualified technician: Installation, operation and inspection.

Safety instructions

Information

Advice

1. Sequence of instructions for use.

- Standalone instruction.

2 Description

2.1 General Description

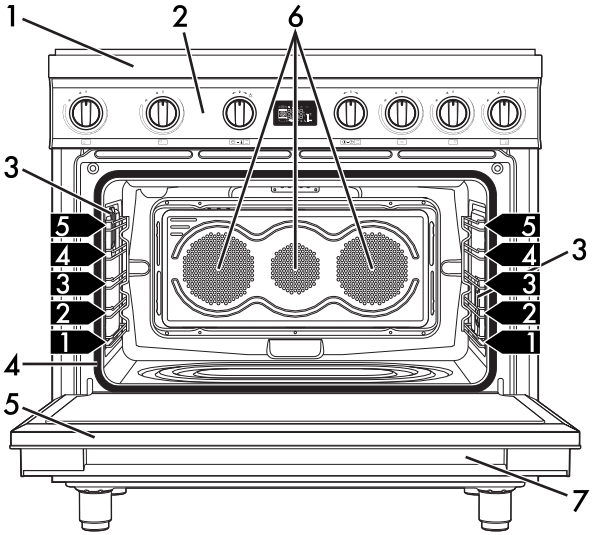

1 Hob

2 Control panel

3 Oven light

4 Seal

5 Door

6 Fan

7 Storage compartment

1,2,3... Rack/tray support frames

2.2 Hob

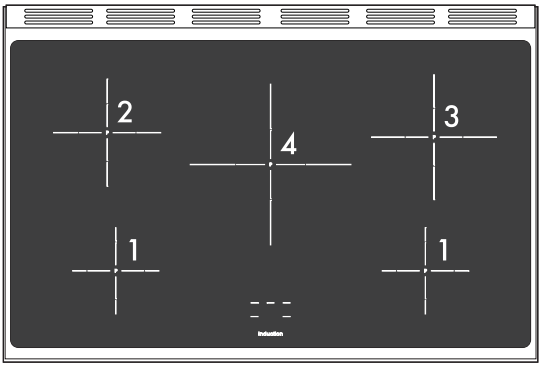

Zone	Outer diameter (mm)	Max. power draw (W)*	Power draw with Booster function (W)*
1	145	1400	2200
2	180	1850	3000
3	210	2300	3700
4	270	2600	3700

* Power levels are approximate and can vary according to the pan used or the settings made.

Advantages of induction cooking

The hob is equipped with an induction generator for each cooking zone. Each generator located under the glass ceramic cooking surface creates an electromagnetic field which induces a thermal current in the base of the pan. This means the heat is no longer transmitted from the hob to the pan but created directly inside the pan by the inductive current.

- Energy saving thanks to the direct transmission of energy to the pan (suitable magnetisable cookware is required) compared to traditional electric cooking.
- Improved safety as the energy is only transmitted to the pan placed on the hob.
- High level of energy transmitted from the induction cooking zone to the base of the pan.
- Rapid heating speed.
- Reduced danger of burns as the cooking surface is only heated under the base of the pan; foods which overflow do not stick.

2.3 Control panel

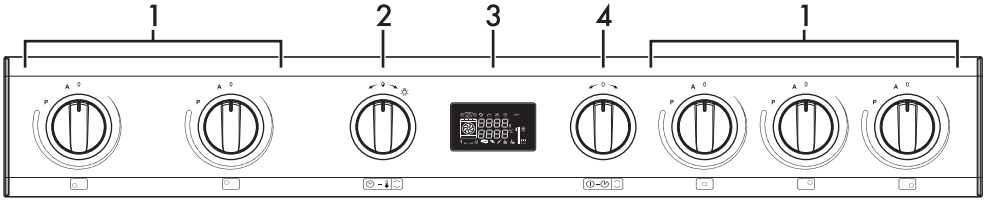

1 Hob cooking zone knobs

Useful for controlling the cooking zones of the induction hob.

Turn the knobs clockwise to adjust the operating power of the hot plate from a minimum of **1** to a maximum of **9**.

The working power is indicated on the display on the hob.

2 Temperature knob

This knob allows you to select the cooking time and temperature, set programmed cooking and the current time as well as turn the light inside the oven on and off.

3 Display

Displays the current time, the selected cooking temperature and function and any time set.

4 Function knob

This knob allows you to turn the appliance on and off and select the cooking function.

2.4 Other parts

Cooling fan

The fan cools the oven and comes into operation during cooking.

The fan causes a steady outflow of air that exits from the rear of the appliance and which may continue for a brief period of time even after the appliance has been turned off.

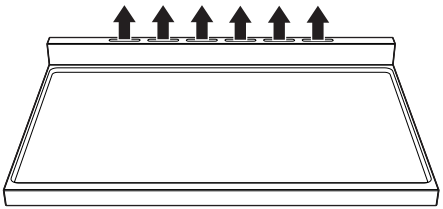

Do not obstruct ventilation openings and heat dispersal slots.

Interior lighting

The appliance's interior lighting comes on:

- When the door is opened.
- When any function is selected, apart from the PYRO ECO + and functions (multifunction models), and the PYRO ECO and PYRO ECO functions (pyrolytic models).
- When the temperature knob is briefly turned to the right (manual activation and deactivation).

When the door is open, it is not possible to turn off the interior lighting.

Shelves

The appliance features shelves to position trays and racks at different heights. The insertion heights are indicated from the bottom upwards (see 2.1 General Description).

2.5 Available accessories

Tray rack

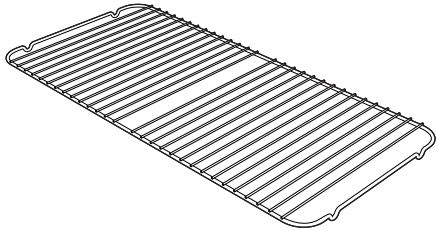

To be placed over the top of the oven tray; for cooking foods which may drip.

Deep tray

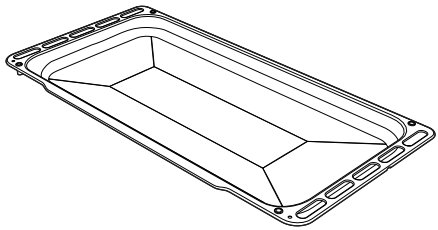

Useful for collecting fat from foods placed on the rack above and for cooking pies, pizzas and baked desserts.

EN

Rack

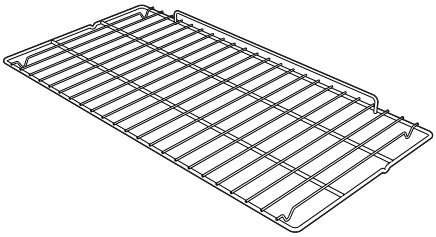

Useful for supporting containers with food during cooking.

3 Use

3.1 Instructions

High temperatures during use
Danger of burns

- Keep the oven door closed during cooking.
- Protect your hands by wearing oven gloves when moving food inside the oven.
- Do not touch the heating elements inside the oven.
- Do not pour water directly onto very hot trays.
- Keep children under the age of 8 away from the appliance when it is in use.
- If you need to move food or at the end of cooking, open the door 5 cm for a few seconds, let the steam come out, then open it fully.

High temperature inside the storage compartment
Danger of burns

- Do not open the storage compartment when the appliance is on and still hot.
- The items inside the storage compartment could be very hot after using the appliance.

Improper use
Risk of damage to surfaces

- Do not cover the bottom of the oven cavity with aluminium or tin foil sheets.
- If you wish to use greaseproof paper, place it so that it will not interfere with the hot air circulation inside the oven.
- Do not place pans or trays directly on the bottom of the oven cavity.
- Do not use the open door to rest pans or trays on the internal glass pane.
- Do not pour water directly onto very hot trays.
- Cooking vessels or griddle plates should be placed inside the perimeter of the hob.
- All pans must have smooth, flat bottoms.
- If any liquid does boil over or spill, remove the excess from the hob.
- Never place pans with bases which are not perfectly flat and smooth.
- Avoid hard, solid objects falling on the surface of the hob.
- In case you notice cracks or fissures, turn off the appliance immediately, disconnect the power supply and contact Technical Support.
- Do not use the hob as a support surface.

Improper use
Danger of burns

- Do not touch or clean the hob surface during operation or when the residual heat indicator lights are still on.
- Activate the controls lock when you have children or pets which could reach the hob.
- After use the cooking zones remain hot for a certain period of time after they have been turned off. Do not touch the hob surfaces.
- Oils and fats could catch fire if overheated. Be very careful.

High temperatures during use
Danger of fire or explosion

- Do not spray any spray products near the appliance.
- Do not use or leave flammable materials near the appliance or the storage compartment.
- Do not use plastic cookware or containers when cooking food.
- Do not put sealed tins or containers in the oven.
- Do not leave the appliance unattended during cooking operations where fats or oils could be released.
- Remove all trays and racks which are not required during cooking.

3.2 First use

1. Remove any protective film from the outside or inside of the appliance, including accessories.
2. Remove any labels (apart from the technical data plate) from the accessories and from the oven cavity.
3. Remove and wash all the appliance accessories (see 4 Cleaning and maintenance).
4. Heat the empty appliance to the maximum temperature to burn off any residues left by the manufacturing process.

3.3 Using the accessories

Tray rack

The tray rack has to be inserted into the tray. In this way fat can be collected separately from the food which is being cooked.

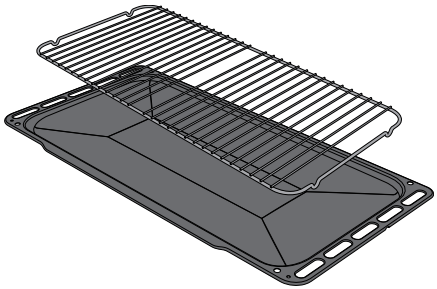

Racks and trays

Racks and trays have to be inserted into the side guides until they come to a complete stop.

The mechanical safety locks that prevent the rack from being taken out accidentally have to face downwards and towards the oven back.

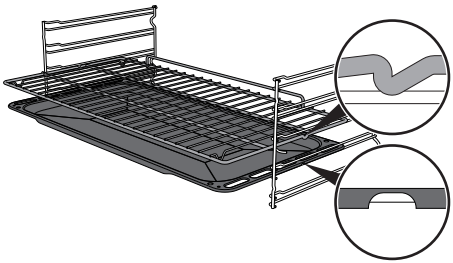

Gently insert racks and trays into the oven until they come to a stop.

Clean the trays before using them for the first time to remove any residues left by the manufacturing process.

3.4 Using the hob

On first connection to the electrical mains, an automatic check will be carried out that will switch on all indicator lights for a few seconds.

After use, turn off the hot plates used by returning the appropriate knob to the **O** position. Never rely solely on the cookware detector.

Improper use
Danger of burns

- WARNING: The pyrolytic cycle deactivates the hob, if in use.
- WARNING: If a pyrolytic cycle is carried out when the cooking zones are still hot, the indications on the hob display are deactivated.

All the appliance's control and monitoring devices are located together on the front panel. The relevant cooking zone is indicated next to each knob.

Just turn the knob clockwise to the required power setting.

Cookware suitable for use in induction cooking

Cookware used on the induction cooking surface must be made of metal, with magnetic properties and a sufficiently large base.

EN

Suitable cookware:

- Enamelled steel cookware with thick bases.
- Cast iron cookware with an enamelled base.
- Cookware in multilayer stainless steel, ferritic stainless steel and aluminium with a special base.

Unsuitable cookware:

- Copper, stainless steel, aluminium, fireproof glass, wood, ceramic and terracotta cookware.

To see whether the pan is suitable, bring a magnet close to the bottom: if it is attracted, the pan is suitable for induction cooking. If you do not have a magnet, you can put a small amount of water in the pan, place it on a cooking zone and start the hot plate. If the symbol U appears on the display, it means the pan is not suitable.

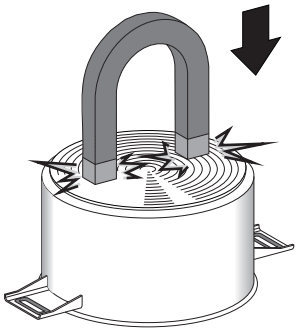

Use only cookware with a perfectly flat bottom which is suitable for induction hot plates. Using cookware with an irregular bottom could jeopardise the efficiency of the heating system and prevent cookware from being detected on the cooking zone.

Cookware recognition

When there is no saucepan on a cooking zone or if the saucepan is too small, no energy will be transmitted and the symbol U will appear on the display.

If there is a suitable saucepan on the cooking zone, the recognition system notices it and turns on the hob to the power level set using the knob. Energy transmission is also interrupted when the saucepan is removed from the cooking zone (the symbol U will be shown on the display).

If the cookware recognition function is activated in spite of the saucepan or frying pan on the cooking zone being smaller than the zone itself, only the necessary energy will be transmitted.

Cookware recognition limits: The minimum diameter of the pan base is indicated by a circle inside the cooking zone. Pans with smaller diameters risk not being detected and therefore not activating the inductor.

Limiting the cooking duration

The hob has an automatic device which limits the duration of use.

If the cooking zone settings are not changed, the maximum duration of operation for each zone depends on the power level selected.

When the device for limiting the duration of use is activated, the cooking zone turns off, a short alert sounds and, if the zone is hot, the symbol H appears on the display.

Set power level	Maximum cooking duration in hours
1	8
2	6
3 - 4	5
5	4
6 - 7 - 8 - 9	1 ½

Protection from overheating

If the hob is used on full power for a long period, the electronics will have trouble cooling down if the room temperature is high.

To avoid excessively high temperatures forming in the electronics, the power to the cooking zone is reduced automatically.

Advice on energy-saving

- The diameter of the base of the pan must correspond to the diameter of the cooking zone.

- When buying a pan, check whether the diameter indicated is that of the base or the top of the pan, as the top is almost always larger than the base.
- When preparing dishes with long cooking times, you can save time and energy by using a pressure cooker, which also makes it possible to preserve the vitamins in the food.
- Make sure that the pressure cooker contains enough liquid as, if there is not enough and it overheats, this may cause damage to both the pressure cooker and the cooking zone.
- If possible, always cover pans with a suitable lid.
- Choose a pan suitable for the quantity of food to be cooked. A large, half-empty saucepan leads to a waste of energy.

Under certain circumstances, if the hob and the oven are being used at the same time, the maximum power limit that can be used by the electrical system might be exceeded.

Power levels

The power in the cooking zone can be adjusted to various levels. The table shows the levels suitable for various types of cooking.

Power level	Suitable for:
0	OFF setting
U	Keeping food warm
1 - 2	Cooking small amounts of food (minimum power)
3 - 4	Cooking
5 - 6	Cooking large quantities of food, roasting larger portions
7 - 8	Roasting, slow frying with flour
9	Roasting
P *	Roasting / browning, cooking (maximum power)

*** see booster function**

Residual heat

Improper use
Danger of burns

- Supervise children carefully as they cannot easily see the residual heat indicator. The cooking zones remain hot for a certain period of time even after they have been turned off. Make sure that children never touch the hob.
- WARNING: If a pyrolysis cycle is carried out when the cooking zones are still hot, the indications on the hob display are deactivated.

If the cooking zone is still hot after being switched off, the symbol H will be displayed on the display. The symbol clears once the temperature drops below 60°C.

Heating accelerator

Each cooking zone is equipped with a heating accelerator that allows the maximum power to be delivered for a time that is proportional to the selected power.

This function allows the selected power to be achieved in the shortest amount of time.

1. Turn the knob anticlockwise to position **A** and then release it. The display shows the symbol A.
2. Select the required heating power (**1 - 8**) within 3 seconds. The selected power and symbol A will flash alternately on the display.

The power level can be increased at any moment. The "maximum power" period will automatically be modified.

Once the acceleration period is over the power level will remain the same as the one previously selected.

If the power is reduced, by turning the knob anti-clockwise, the heating accelerator will automatically be disabled.

Keep warm

The Keep warm function allows you to keep cooked food warm.

To activate the Keep Warm function:

- Turn the knob for the required cooking zone until the symbol u appears on the corresponding display.

Booster function

The booster function allows the cooking zone to be activated at maximum power for as long as 5 minutes. It can be used to bring a large quantity of water to a boil rapidly or to broil meat.

- Turn the knob clockwise to the **P** position for two seconds and then release.

The display shows the symbol P. After 5 minutes the Booster function will automatically be disabled and cooking will continue at power level **9** (on zones **2** and **3** only).

The Booster function has priority over the heating accelerator function.

Power control

The hob is fitted with a power control module that optimises/limits consumption. If the overall set power level exceeds the maximum limit permitted, the electronic circuit board will automatically manage the power supplied by the hot plates.

The module tries to maintain the maximum deliverable power levels. Levels set by the automatic control will appear on the display.

The flashing of a power level indicates that it will be automatically limited to a new level selected by the power control module.

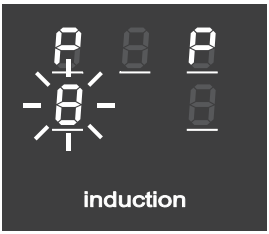

Priority is given to the last zone set.

Controls lock

The controls lock is a device that protects the appliance from accidental or inappropriate use.

1. With all cooking zones off, simultaneously turn the two cooking zone control knobs anti-clockwise to the left (position **A**).
2. Keep them turned until the symbols appear on the display.
3. Release the knobs.

In order to remove the control lock repeat the same operations described previously.

If the knobs have been kept turned to the **A** position for more than 30 seconds, the following fault message appears on the display

After a prolonged period of interruption to the power supply, the control lock will be deactivated. If this is the case, turn it back on as described above.

Error codes

If the display shows one of the following error codes , , contact Technical Assistance.

3.5 Using the oven

Display

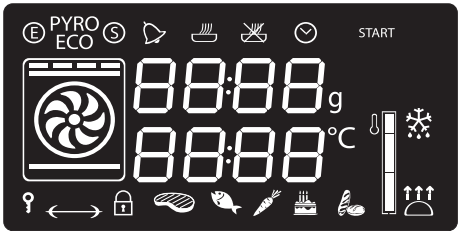

Eco-logic indicator light

PYRO ECO Pyrolytic function indicator light (pyrolytic models only)

Showroom indicator light

Minute minder timer indicator light

Timed cooking indicator light

Programmed cooking indicator light

Clock indicator light

Child lock indicator light

Door lock indicator light

Temperature level reached

Operating modes

Stand-by: When no function is selected, the display shows the current time.

ON: When a function is activated, the display shows the parameters set such as temperature, duration and temperature reached.

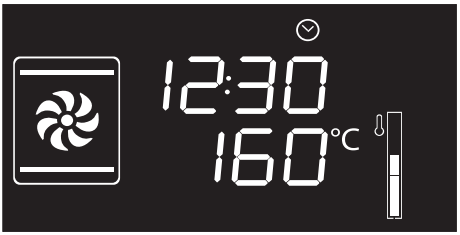

Each time the temperature knob is pressed during a function, the parameters will be cycled through in the following order.

°C Temperature

Minute minder timer duration

Function duration

Programmed cooking duration (if timed cooking has been selected)

Time display

In all modes it is possible to modify the value by turning the temperature knob to the left or right. Keep the knob turned to produce a faster increase or decrease.

Setting the time

When using the appliance for the first time, or after a power failure, the 00:00 symbol will flash on the display. To be able to start any cooking function, the current time must be set.

1. Turn the temperature knob to set the displayed time (keep the knob turned to produce a faster increase or decrease).
2. Press the temperature knob.
3. Turn the temperature knob to set the minutes (keep the knob turned to produce a faster increase or decrease).
4. Press the temperature knob to finish adjustment.

It may become necessary to change the current time, for example for daylight saving time. From the stand-by position, keep the temperature knob turned to the right or left until the hours flash.

It is not possible to change the time if the oven is ON.

Cooking functions

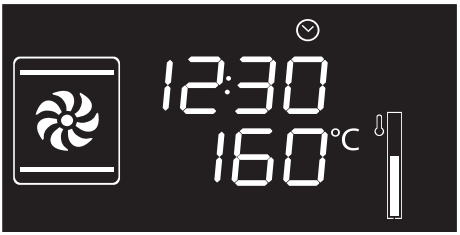

1. Press and turn the function knob to select the required cooking function.
2. Press and turn the temperature knob to modify the cooking temperature.
3. Press the function knob to start traditional cooking.

A function can be interrupted at any time by pressing and holding the function knob for at least 3 seconds.

Preheating stage

Cooking itself is preceded by a preheating stage, which allows the appliance to heat to the cooking temperature more quickly.

The temperature level indicator flashes to indicate that this stage is in progress.

When the preheating stage is complete, temperature level reached indication will remain lit steadily and a buzzer sounds to indicate that the food can be placed inside the oven.

Functions list

ECO Eco

This function is particularly suitable for cooking on a single shelf with low energy consumption.

Ideal for cooking meat, fish and vegetables. It is not recommended for leavened foods.

To obtain maximum energy savings and reduce cooking times, it is recommended to place food in the oven without preheating.

When using the ECO function, avoid opening the door during cooking.

Cooking (and preheating) times are longer with the ECO function.

Static

As the heat comes from above and below at the same time, this system is particularly suitable for certain types of food. Traditional cooking, also known as static cooking, is suitable for cooking just one dish at a time. Perfect for all types of roasts, bread and cakes, and in any case, particularly suitable for fatty meats such as goose and duck.

Grill

The heat coming from the grill element gives perfect grilling results above all for thin and medium thickness meat and, in combination with the rotisserie (where fitted), gives the food an even browning at the end of cooking. Perfect for sausages, spare ribs and bacon. This function enables large quantities of food, particularly meat, to be grilled evenly.

Lower element

The heat coming just from the bottom allows you to complete the cooking of foods that require a higher bottom temperature, without affecting their browning. Perfect for cakes, pies, tarts and pizzas.

Fan assisted

The operation of the fan, combined with traditional cooking, ensures consistent cooking even with complex recipes. Perfect for biscuits and cakes, even when simultaneously cooked on several levels. (For multiple-level cooking, we recommend using the 2nd and 4th shelf).

Fan with grill

The air produced by the fan softens the strong heatwave generated by the grill, grilling perfectly even very thick foods. Perfect for large cuts of meat (e.g. shin of pork).

EN

Fan + lower element

The combination of the fan with just the lower heating element allows cooking to be completed more rapidly. This system is recommended for sterilising or for finishing off the cooking of foods which are already well-cooked on the surface, but not inside, which therefore need a little more heat. Perfect for any type of food.

Circulaire

The combination of the fan and the circulaire heating element (incorporated in the rear of the oven) allows you to cook different foods on several levels, as long as they need the same temperatures and same type of cooking. Hot air circulation ensures instant and even distribution of heat. It will be possible, for instance, to cook fish, vegetables and biscuits simultaneously (on different levels) without odours and flavours mingling.

Turbo

The combination of fan assisted cooking and traditional cooking allows different foods to be cooked on several levels extremely quickly and efficiently, without odours and flavours mingling. Perfect for large volumes that call for intense cooking.

Minute minder

This function only activates the buzzer, without stopping cooking.

The minute minder can be activated both during cooking and when the appliance is in standby.

1. Press the temperature knob once (twice if cooking is already in progress). The display shows 00:00 and the indicator light flashes.

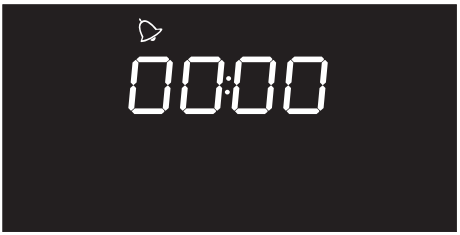

2. Turn the temperature knob to set the duration (from 1 minute to 4 hours). After a few seconds, the indicator light stops flashing and the countdown starts.
3. Select the required cooking function and wait for the buzzer to sound, indicating that the cooking time is over. The indicator light flashes.

4. To deactivate the buzzer, press or turn one of the two knobs.
5. To select a further minute minder, turn the temperature knob.

You must set the value to zero to remove the minute minder timer.

Timed cooking

Timed cooking is the function which allows a cooking operation to be started and then ended after a specific length of time set by the user.

Activation of timed cooking cancels any minute minder timer which may previously have been set.

1. After selecting a cooking function and temperature, press the temperature knob three times. The display shows 0000 and the indicator light flashes.

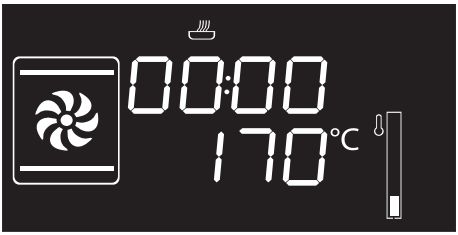

2. Turn the temperature knob right or left to set the cooking duration from 00:01 to 12:59. Keep the knob turned to produce a faster increase or decrease.

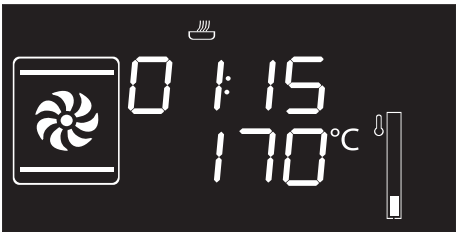

3. A few seconds after the required duration is set, the indicator light stops flashing and timed cooking starts.

To extend the cooking time manually, press the temperature knob again. The appliance will resume its normal operation with the previously selected cooking settings.

4. At the end of cooking, StoP is shown on the display and a buzzer sounds.

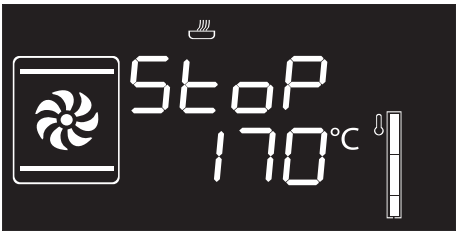

EN

5. To deactivate the buzzer, press or turn one of the two knobs or open the door.

To deactivate the buzzer and select a further timed cooking, turn the temperature knob to the right.

To deactivate the buzzer and select a different cooking function, turn the function knob to the right or left.

Press and hold the function knob down to switch off the appliance.

Modifying the data set during timed cooking

During operation, it is possible to modify timed cooking duration:

1. When the indicator light is steady and cooking is in progress inside the appliance, press the temperature knob twice. The indicator light starts flashing.
2. Turn the temperature knob right or left to change the previously set cooking duration.

Programmed cooking

Programmed cooking is the function which allows cooking to be stopped at an established time depending on the time set by the user, after which the appliance will switch off automatically.

1. After selecting a cooking function and temperature, press the temperature knob three times. The display shows 00:00 and the indicator light flashes.

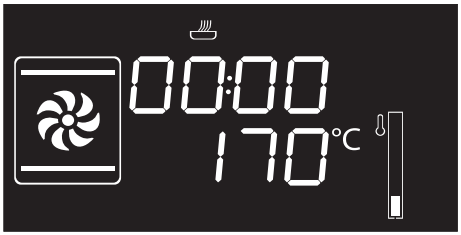

2. Turn the knob right or left to set the cooking duration from 00:01 to 12:59. Keep the knob turned to increase or decrease it more quickly.

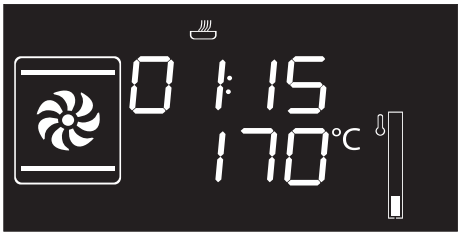

3. Press the temperature knob a fourth time. The indicator light flashes. Turn the knob right or left to set the cooking end time.
4. After a few seconds the indicator lights and stop flashing. The appliance waits for the set start time.

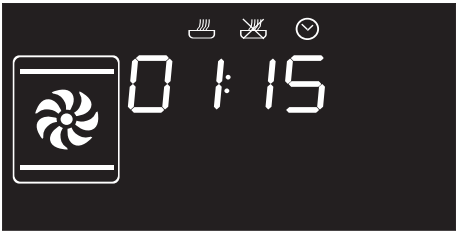

To extend the cooking time manually, press the temperature knob again. The appliance will resume its normal operation with the previously selected cooking settings.

With timed cooking, the oven is switched on ten minutes beforehand to allow the appliance to reach cooking temperature (preheating).

5. At the end of cooking, StoP is shown on the display and a buzzer sounds.

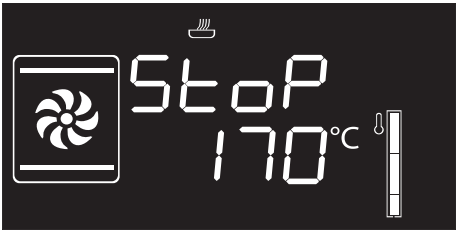

6. To deactivate the buzzer, press or turn one of the two knobs or open the door.

Press and hold the function knob down to switch off the appliance.

For safety reasons, it is not possible to set the end of cooking time by itself without setting the cooking duration.

EN

Modifying the data set during programmed cooking

After modifying the cooking duration, the end of cooking time must be re-set.

During operation, it is possible to modify programmed cooking duration:

1. When the indicator lights and are lit steadily and the appliance is waiting for cooking to start, press the temperature knob twice. The indicator light starts flashing.
2. Turn the temperature knob right or left to change the previously set cooking duration.
3. Press the temperature knob again. The indicator light switches off and the indicator light starts flashing. The display shows the cooking end time.
4. Turn the temperature knob right or left to delay the cooking end time.
5. After a few seconds the indicator lights and stop flashing and programmed cooking resumes its operation with the new settings.

3.6 Cooking advice

General advice

- Use a fan assisted function to achieve consistent cooking at several levels.
- It is not possible to shorten cooking times by increasing the temperature (the food could be overcooked on the outside and undercooked on the inside).
- For the same total weight, cooking time will be greater for cooking a whole piece than when it is cut into smaller pieces.

Advice for cooking meat

- Cooking times vary according to the thickness and quality of the food and to consumer taste.
- Use a meat thermometer when roasting meat, or simply press on the roast with a spoon. If it is hard, it is ready; If not, it needs another few minutes cooking.

Advice for cooking with the Grill

- Meat can be grilled even when it is put into the cold oven or into the preheated oven if you wish to change the effect of the cooking.
- With the Fan with grill function, we recommend that you preheat the oven before grilling.
- We recommend placing the food at the centre of the rack.

EN

Advice for cooking desserts/pastries and biscuits

- Use dark metal moulds: They help to absorb the heat better.
- The temperature and the cooking time depend on the quality and consistency of the dough.
- When cooking on multiple levels, food should ideally be positioned on the second and fourth shelves; increase cooking time by a few minutes and only used fan functions.
- To check whether the dessert is cooked right through: At the end of the cooking time, put a toothpick into the highest point of the dessert. If the dough does not stick to the toothpick, the dessert is cooked.
- If the dessert collapses when it comes out of the oven, on the next occasion reduce the set temperature by about 10°C, selecting a longer cooking time if necessary.
- The cooking time for meringues and choux pastry will vary depending on the size.

Advice for defrosting and proving

- Place frozen foods without their packaging in a lidless container on the first shelf of the oven.
- Avoid overlapping the food.
- To defrost meat, use the rack placed on the second level and a tray on the first level. In this way, the liquid from the defrosting food drains away from the food.
- Bread and fruit, if divided into pieces, will take the same amount of time to defrost, regardless of the total weight and quantity.
- The most delicate parts can be covered with aluminium foil.
- For successful proving, a container of water should be placed in the bottom of the oven.

To save energy

- Stop cooking a few minutes before the time normally used. Cooking will continue for the remaining minutes with the heat which has accumulated inside the oven.
- Reduce any opening of the door to a minimum to avoid heat dispersal.
- Keep the inside of the appliance clean at all times.
- (Where fitted) When it is not being used, remove the pizza stone from the base of the oven.

3.7 Special functions

Defrost by time

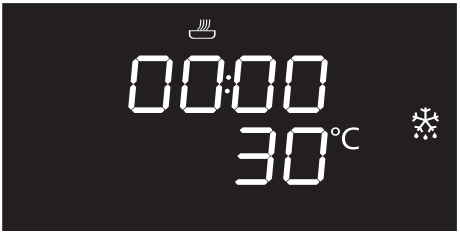

1. Place the food inside the oven.
2. Press and turn the function knob to select the defrost by time function ❄.
3. Turn the temperature knob to set the duration (from 1 to 99 minutes).
4. Press the temperature knob to confirm the set duration. START flashes.
5. Press the function knob to start the defrost by time function.
6. At the end, StoP is displayed and a buzzer sounds.
7. To deactivate the buzzer, press or turn one of the two knobs or open the door.
8. Press and hold the function knob for at least 3 seconds to exit the function.

Proving

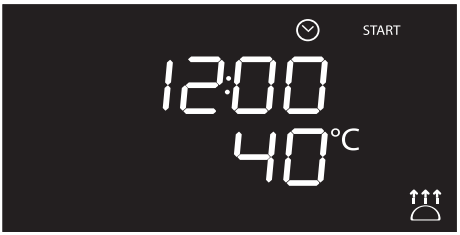

When using the proving function the temperature cannot be altered.

For successful proving, a container of water should be placed in the bottom of the oven.

1. Position the dough for proving on the second shelf.
2. Press and turn the function knob to select the proving function. START flashes.
3. Press the function knob to start the proving function.
4. At the end, StoP is displayed and a buzzer sounds.
5. To deactivate the buzzer, press or turn one of the two knobs or open the door.
6. Press and hold the function knob for at least 3 seconds to exit the function.

Sabbath

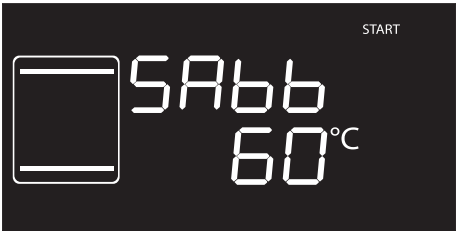

This function allows food to be cooked in accordance with the provisions of the Jewish religion day of rest.

This function results in the appliance operating in a particular way:

- Cooking can proceed indefinitely, it is not possible to set any time.
- No preheating will be performed.
- The cooking temperature which can be selected varies between 60-100 °C.
- Oven light disabled, any operation such as opening the door or manual activation with the knob will not activate the light.
- The internal fan remains turned off.
- Knob illumination and audible prompts remain disabled.

After activating the Sabbath function the settings cannot be altered.

Any action on the knobs will produce no effect; only the function knob remains active to allow the appliance to be turned off.

1. Press and turn the function knob to select the Sabbath function SAbb.
2. Press and turn the temperature knob to modify the temperature of the function.
3. Press the temperature knob to confirm the set temperature. START flashes.
4. Press the function knob to start the Sabbath function.
5. Press and hold the function knob for at least 3 seconds to exit the function.

Defrost by weight

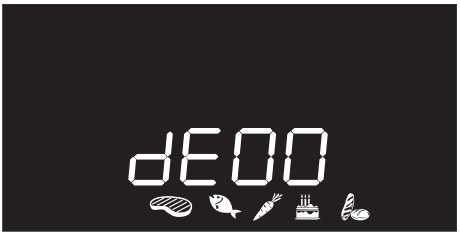

This function defrosts foods on the basis of the type and weight of the frozen products.

1. Place the food inside the oven.
2. Press and turn the function knob to select defrost by weight, marked by dE00 and the illuminated food symbols.
3. Press the function knob to confirm the defrost by weight function.
4. Turn the function knob to select the type of food to defrost.
5. Turn the temperature knob to select the weight (in grams) of the food to defrost.
6. Press the function knob to confirm the set parameters and start defrosting.
7. At the end, StoP is displayed and a buzzer sounds.
8. To deactivate the buzzer, press or turn one of the two knobs or open the door.
9. Press and hold the function knob for at least 3 seconds to exit the function.

Pre-set parameters

dE	Type	Weight (g)	Time (min)*
01	Meat	500	120
02	Fish	300	55
03	Fruit	300	35
04	Bread	300	25

* Defrosting times may vary according to the shape and size of the food to be defrosted.

3.8 Automatic programs

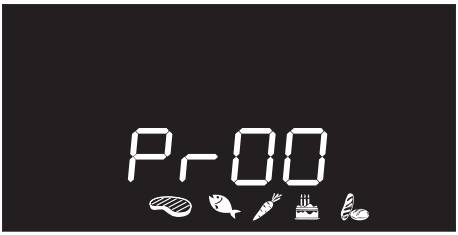

The automatic cooking programs are divided up according to the type of dish to be cooked.

1. Press and turn the function knob to select cooking with automatic programs, marked by Pr00 and the illuminated food symbols .
2. Press the function knob to confirm cooking with automatic programs.
3. Turn the function knob to select the preferred program (see Automatic programs table).
4. Turn the temperature knob to select the weight (in grams) of the food to cook.
5. When preheating has finished, START will flash. Introduce the food and then press the function knob to start cooking.
6. At the end, StoP is displayed and a buzzer sounds.
7. To deactivate the buzzer, press or turn one of the two knobs or open the door.
8. Press and hold the function knob for at least 3 seconds to exit the function.

It is possible to set programmed cooking in automatic programs.

A function can be interrupted at any time by pressing and holding the function knob for at least 3 seconds.

EN

Automatic programs table

MEAT (01 - 05)

Pr	Subcategory	Weight (g)	Level	Function	Temperature (°C)	Time (minutes)
01	Roast beef (medium)	1300	2		200	56
02	Roast pork	800	2		190	88
03	Lamb (medium)	2000	2		190	105
04	Veal	1000	2		190	80
05	Whole roast chicken	1000	2		200	80

FISH (06 - 07)

Pr	Subcategory	Weight (g)	Level	Function	Temperature (°C)	Time (minutes)
06	Fresh fish (whole)	500	2		160	35
07	Frozen fish	600	2		160	50

VEGETABLES (08 - 10)

Pr	Subcategory	Weight (g)	Level	Function	Temperature (°C)	Time (minutes)
08	Mixed grilled	500	4		250	15 + 8 [1]
09	Roasted	1000	2		200	33
10	Roasted potatoes	1000	2		200	30

[1] When grilling, it is recommended to cook foods on both sides, making reference to the times given in the table. The greater time always refers to the first side to be cooked, starting with raw foodstuffs.

DESSERTS/PASTRIES (11 - 13)

Pr	Subcategory	Weight (g)	Level	Function	Temperature (°C)	Time (minutes)
11	Biscuits	500	2		160	23
12	Muffins	500	2		160	21
13	Tart	1000	2		170	43

BREAD - PIZZA - PASTA (14-20)

Pr	Subcategory	Weight (g)	Level	Function	Temperature (°C)	Time (minutes)
14	Leavened bread (loaf)	1000	2		200	27
15	Pan baked pizza	1000	2		280	12
16	Stone baked pizza	500	1 [2]		280	7
17	Pasta bake	2000	1		220	35
18	Lasagne	2000	1		230	40
19	Paella	500	2		190	25
20	Quiche	1000	1		200	40

[2] The stone must be positioned on the base of the oven. Frozen pizza cooked on the stone does not require different cooking times depending on weight.

The times indicated in the tables do not include preheating times and refer to cooking whole pieces. If the foodstuffs are cut into smaller portions, the cooking times will decrease.

3.9 Secondary menu

The appliance has a drop-down secondary menu allowing the user to:

- Activate or deactivate the Child lock.
- Activate or deactivate Showroom mode (which disables all the heating elements so that only the control panel works).
- Activate or deactivate Low Power (Eco-Logic) mode.
- Activate or deactivate Keep Warm mode.
- Activate or deactivate Timed light (Eco-light) mode.

With the appliance in Stand-By

1. Activate the internal light by turning the temperature knob quickly.
2. Press and hold the temperature knob down for at least 5 seconds.
3. Turn the temperature knob right or left to change the setting status (ON/OFF).
4. Press the temperature knob to move to the next mode.

To release the lock temporarily during cooking, hold the temperature knob down for 5 seconds. One minute after the last setting the lock will become active again.

When the position of the knobs is changed, the display will show bLoC for a few seconds.

It is still possible to turn the appliance off instantaneously by pressing and holding the function knob down for 3 seconds when in child lock mode.

To use the appliance normally, set this

Child lock mode

This mode allows the appliance to lock the controls automatically after one minute of normal operation without any intervention from the user.

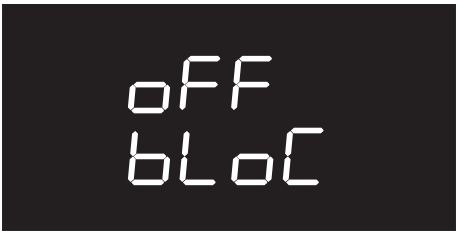

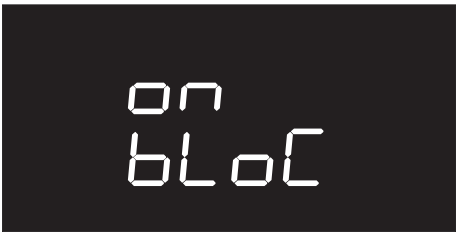

During normal operation it is indicated by the indicator light coming on.

Showroom mode (for exhibitors only)

This mode allows the appliance to deactivate all heating elements, while keeping the control panel active.

mode to OFF.

If the mode is active, the indicator light Ⓢ lights up on the display.

Low Power (Eco-logic) mode

This mode allows the appliance to limit the power used.

Suitable for simultaneous use with further home appliances.

HI: normal power.

LO: low power.

Activating eco-logic mode means that preheating and cooking times may be extended.

If the mode is active, the indicator light Ⓔ lights up on the display.

EN

Keep Warm mode

This mode allows the appliance to keep cooked food warm (at low temperatures) for around an hour after cooking finishes with a cooking cycle for which a duration has been set (if this is not manually interrupted).

Timed light (Eco-light) mode

For greater energy savings, the light is automatically deactivated one minute from the start of cooking.

To stop the appliance from automatically deactivating the light after one minute, set this mode to OFF.

The manual off/on control is always available with both settings by turning the temperature knob to the right.

3.10 Using the storage compartment (if present)

There is a storage compartment located at the bottom of the cooker; this can be used to store pans or metal objects required for its use.

1. To open the storage compartment, press lightly on the left-hand side of the door until it clicks.

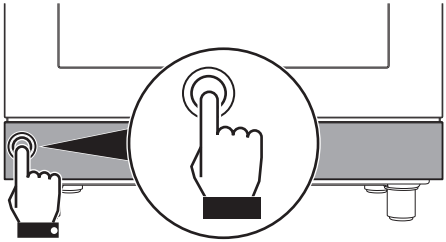

2. Gently release the storage compartment door.

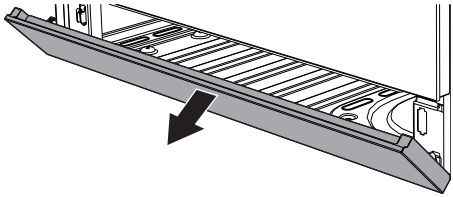

3. To close the storage compartment again, lift the door until it clicks.

3.11 Using the storage compartment

The storage compartment is at the bottom of the cooker. To open it, pull the handle towards you. It can be used to store cookware or metallic objects necessarywhen using the appliance.

4 Cleaning and maintenance

4.1 Instructions

Improper use
Risk of damage to surfaces

- Do not use steam jets to clean the appliance.
- Do not use cleaning products containing chlorine, ammonia or bleach on parts made of steel or that have metallic surface finishes (e.g. anodizing, nickel- or chromium-plating).
- Do not use abrasive or corrosive detergents (e.g. scouring powders, stain removers and metallic sponges) on glass parts.
- Do not use rough or abrasive materials or sharp metal scrapers.
- Do not wash removable parts such as the hob pan support grids, flame-spreader crowns and burner caps in the dishwasher.

We recommend the use of cleaning products distributed by the manufacturer.

4.2 Cleaning the glass ceramic hob

To keep the surfaces in good condition, they should be cleaned regularly after use. Let them cool first.

Light coloured marks from pans with aluminium bases can be easily cleaned off with a cloth moistened in vinegar.

Remove any burnt-on residue after cooking; rinse with water and dry thoroughly with a clean cloth.

Dirt which may have fallen on the hob while cleaning lettuce or potatoes can scratch the hob when moving pans.

Consequently, remove any dirt from the cooking surface immediately.

Changes in colour do not affect the operation and stability of the glass. These are not alterations to the material of the hob but just residues which have not been removed and have then carbonised.

Shiny surfaces can form due to the bases of pans, especially aluminium ones, rubbing on the surface, and due to the use of unsuitable detergents. They are difficult to remove using conventional cleaning products. It may be necessary to repeat the cleaning process several times. Use of corrosive detergents or rubbing of pan bases can wear away the decoration on the hob over time and contribute to the formation of stains.

Ordinary daily cleaning

Always and only use specific products that do not contain abrasives or chlorine-based acids.

Pour the product onto a damp cloth and wipe the surface, rinse thoroughly and dry with a soft cloth or a microfibre cloth.

Weekly cleaning

Clean and maintain the hob once a week using an ordinary glass ceramic cleaning product. Always follow the manufacturer's instructions. The silicon in these products creates a protective, water-repellent membrane which also resists dirt. All marks stay on the membrane and can therefore be removed easily. After cleaning, dry the surface with a clean cloth. Make sure that there is no detergent left on the cooking surface as it might undergo an aggressive reaction when heated up and could modify the structure of the cooking surface.

Food stains or residues

Do not use steel sponges and sharp scrapers as they will damage the surface.

Use normal, non-abrasive products and a wooden or plastic tool, if necessary. Rinse thoroughly and dry with a soft cloth or a microfibre cloth.

Do not allow residues of sugary foods (such as jam) to set inside the oven. If left to set for too long, they might damage the enamel lining of the oven.

4.3 Cleaning the door

The glass in the door should always be kept thoroughly clean. Use absorbent kitchen roll. In case of stubborn dirt, wash with a damp sponge and an ordinary detergent.

Removing the door

For easier cleaning it is recommended to remove the door and place it on a tea towel.

To remove the door proceed as follows:

1. Open the door completely and insert two pins into the holes on the hinges indicated in the figure.

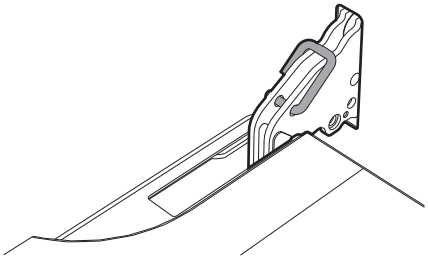

2. Grasp the door on both sides with both hands, lift it forming an angle of around 30° and remove it.

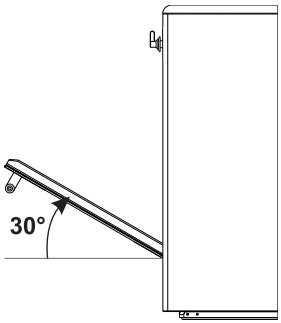

3. To reassemble the door, put the hinges in the relevant slots in the oven, making sure that grooved sections **A** are resting completely in the slots. Lower the door and once it is in place remove the pins from the holes in the hinges.

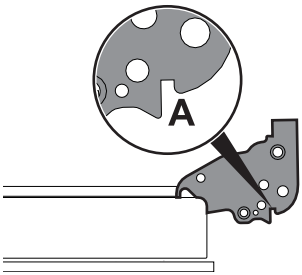

Removing the internal glass panes

For easier cleaning the internal glass panes of the door can be removed.

1. Pull the rear part of the internal glass pane gently upwards, following the movement indicated by the arrows (**1**).

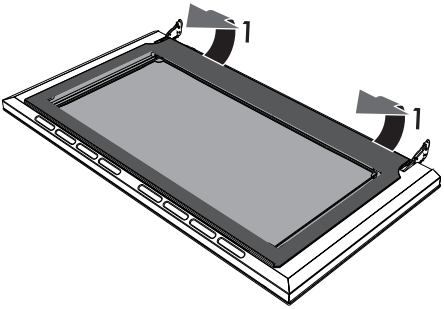

2. Remove the internal glass pane from the front strip (**2**) to remove it from the door.

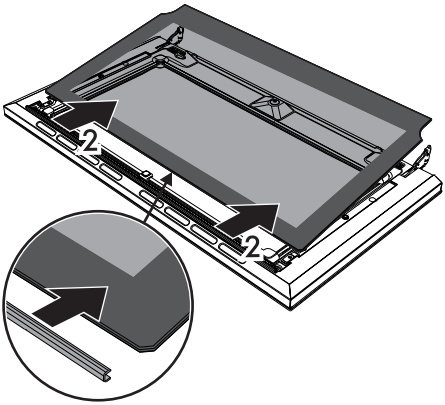

3. Remove the intermediate glass pane by lifting it upwards.

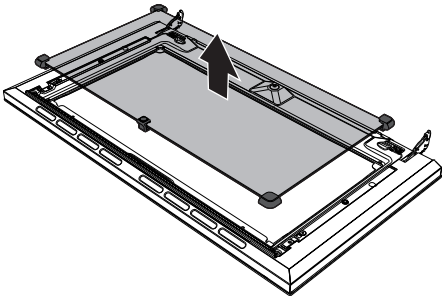

The pyrolytic model has two intermediate glass panes.

4. Clean the external glass pane and the panes removed previously. Use absorbent kitchen roll. In case of stubborn dirt, wash with a damp sponge and neutral detergent.

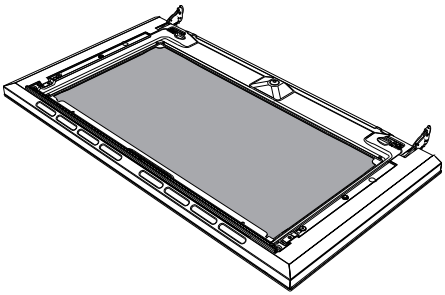

5. When you have finished cleaning, reinsert the intermediate glass pane in its housing in the door.
6. To reposition the internal glass pane, slide the upper part into the door strip and insert the two rear pins into their seats by pressing lightly.

4.4 Cleaning the oven cavity

In order to keep your oven in the best possible condition, clean it regularly after letting it cool down.

Avoid letting food residue dry inside the oven cavity, as this could damage the enamel.

Take out all removable parts before cleaning.

For easier cleaning, we recommend removing:

- The door
- The rack/tray support frames
- Removable guides, where fitted
- The seal.

In the event you are using specific cleaning products, we recommend running the oven at maximum temperature for 15-20 minutes in order to eliminate any residue.

Removing rack/tray support frames

Removing the rack/tray support frames enables the sides to be cleaned more easily.

To remove the rack/tray support frames:

- Pull the frame towards the inside of the oven to unhook it from its groove **A**, then slide it out of the seats **B** at the back.

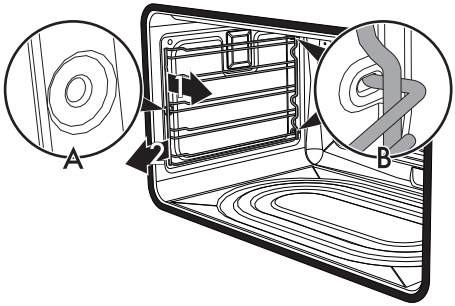

- When cleaning is complete, repeat the above procedures to put the rack/tray support frames back in.

Deactivating the door lock lever manually

Improper use
Danger of burns

- The following operations must always be performed with the appliance cold and switched off.
- Never attempt to manually deactivate the door lock lever during a pyrolytic cycle.

The door lock lever is located in the first slot on the left under the control panel, in the upper part of the front of the oven.

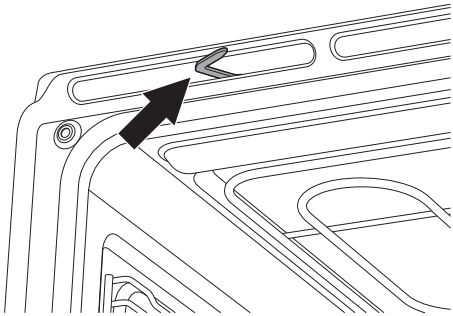

During normal cleaning operations, it is possible to accidentally activate the door lock lever.

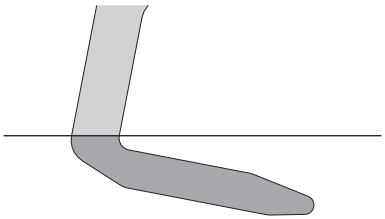

Door lock lever activated

(view from above)

1. Move the door lock lever to the right until it stops.

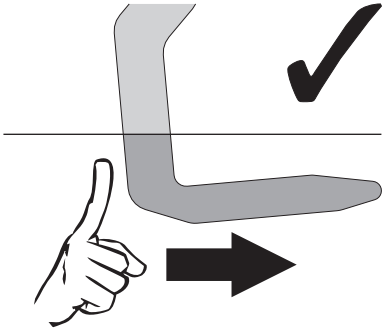

(view from above)

2. Gently release the door lock lever.

The mechanism's spring will return the door lock lever to the deactivated position.

To prevent damage to the mechanism, never attempt to deactivate the door lock lever by forcing it to the left.

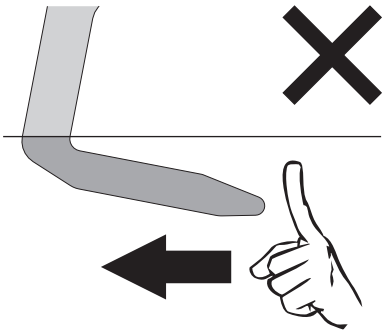

(view from above)

EN

Pyrolytic cycle

Pyrolytic cleaning is an automatic, high-temperature cleaning procedure that causes dirt to dissolve. Thanks to this process, it is possible to clean the inside of the oven very easily.

Improper use
Risk of damage to surfaces

- Remove any food residues or large spills from previous cooking operations from the inside of the oven.

Improper use
Danger of burns

- WARNING: The pyrolysis cycle deactivates the hob.
- WARNING: If a pyrolysis cycle is carried out when the cooking zones are still hot, the indications on the hob display are deactivated.

Preliminary operations

Before starting the pyrolytic cycle:

- Clean the internal glass pane following the usual cleaning instructions.
- Completely remove all accessories from inside the oven.
- For very stubborn encrustations spray an oven cleaning product onto the glass (read the warnings on the product); leave for 60 minutes, then rinse and dry the glass using kitchen roll or a microfibre cloth.
- Remove the rack/tray support frames.
- Detach removable guides, where fitted.
- Close the door.

Pyrolytic function setting

1. Select one of the cleaning functions PYRO ECO or PYRO ECO with the function knob.
2. Turn the temperature knob to the right or to the left to set the cleaning cycle duration from a minimum of 2 hours to a maximum of 3 hours (except for the PYRO ECO function whose duration is 120 minutes).
3. Press the temperature knob to start the pyrolytic cycle.

Recommended pyrolytic cycle duration:

- Light dirt: 2 hours.
- Medium dirt: 2 ½ hours.
- Heavy dirt: 3 hours.

Pyrolytic cycle

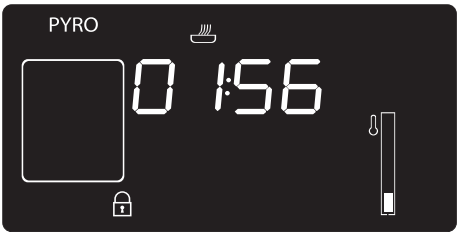

1. The display shows PYRO ECO or PYRO ECO and the remaining time to indicate that the appliance is carrying out the automatic cleaning cycle.
2. Two minutes after the pyrolytic cycle has started the door is locked (the door lock indicator light comes on) by a device that prevents the door from being opened.

It is not possible to select any function once the door lock device has been activated.

3. At the end of the pyrolytic cycle, the door remains locked as long as the temperature inside the oven cavity returns to safety levels. Wait for the oven to cool down and collect the residue deposited inside it using a damp microfibre cloth.

During the first pyrolytic cycle, unpleasant odours may occur due to the normal evaporation of oily manufacturing substances. This is an absolutely normal phenomenon which disappears after the first pyrolytic cycle.

During the pyrolytic cycle the fans produce a more intense level of noise due to a greater rotation speed. This is an absolutely normal operation, intended to provide more effective heat dispersal. At the end of the pyrolytic cycle, the fans will continue to operate for long enough to avoid overheating the walls of adjacent units and the front of the oven.

If the pyrolytic cycle gives unsatisfactory results at minimum duration, it is recommended to set a longer time for successive cleaning cycles.

Setting of programmed pyrolytic cycle

It is possible to program the pyrolytic cycle start time like all other cooking functions.

1. After selecting the pyrolytic cycle duration, press the temperature knob. The display shows the current time and the indicator light comes on.
2. Turn the temperature knob to set the time at which you wish to complete the pyrolytic cycle.
3. After a few seconds, the and indicator lights will turn on steadily and the appliance waits for the set start time to start the cleaning cycle.

It is not possible to select any function once the door lock device has been activated.

4.5 Extraordinary maintenance

Replacing the internal light bulb

Live parts
Danger of electrocution

- Unplug the appliance.

The oven is fitted with a 40W light bulb.

1. Completely remove all accessories from inside the oven.
2. Remove the rack/tray support frames.
3. Remove the bulb cover using a tool (e.g. a screwdriver).

Pay attention not to scratch the oven cavity enamel.

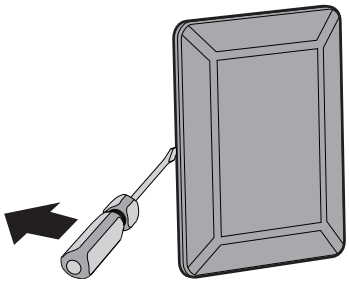

EN

4. Slide out and remove the light bulb.

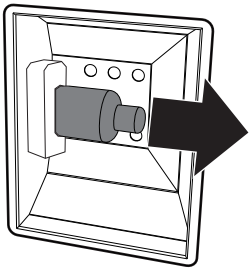

Do not touch the halogen light bulb directly with your fingers, but wrap it in insulating material.

5. Fit the new light bulb.
6. Refit the cover. Ensure the moulded part of the glass (A) is facing the door.

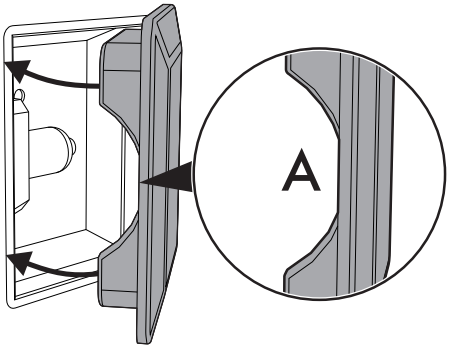

7. Press the cover completely down so that it attaches perfectly to the bulb support.

What to do if...

The appliance is not working properly:

- The switch is defective: check the fuse box to see whether the switch is in working order.
- Loss of power: check that the appliance indicator lights are operational.

The hob smokes:

- The hob is dirty, clean it once cooking has finished.

The cookware in use are making a noise.

- There is no danger for the hob or the pan, this is normal with certain types of cookware.

The oven does not heat up:

- Defective fuse: check and replace the switch if necessary.
- The function knob has not been set: set the function knob.
- Check whether it has been set to "showroom" mode (for further details see "Secondary menu").

All food prepared in the oven burns within a short time:

- Defective thermostat: contact an Authorised Service Centre

The door glass mists up when the oven is hot:

- This is normal and is caused by the difference in temperature. It does not affect the performance of the oven.

The display is completely off:

- Check the mains power supply.
- Check whether an omnipolar switch upstream of the appliance supply line is in the "ON" position.

The controls do not respond:

- Check whether "child lock" mode has been set (for further details see "Secondary menu").

The cooking times are longer than those indicated in the table:

- Check whether it has been set in "eco-logic" mode (for further details see "Secondary menu").

The display shows "ERR4":

- The door lock has not properly attached to the door. This might be because the door was accidentally opened during the door lock activation. Switch the appliance off and on again, waiting a few minutes before selecting a new cleaning cycle.

If the door is opened during a fan assisted function, the fan stops:

- This is not a fault. It is a normal operation of the appliance, useful when cooking foods in order to avoid excessive heat escaping. When the door is closed, the oven will return to normal operation.

After the (pyrolytic) automatic cleaning cycle it is not possible to select a function:

- Verify whether the door lock has deactivated. If it has not, the appliance is fitted with a safety device that does not allow functions to be selected while the door lock is active. This is because the temperature inside the oven is still too high to permit any type of cooking.

If the problem has not been resolved or in the case of other types of fault, contact your local technical support centre.

If other ERRx error messages are indicated:

Note down the error message, function and set temperature and contact your local technical support centre.

5 Installation

5.1 Positioning

Heavy appliance
Crushing hazard

- Position the appliance into the cabinet cut-out with the help of a second person.

Pressure on the door
Risk of damage to the appliance

- Never use the oven door to lever the appliance into place when fitting.
- Avoid exerting too much pressure on the oven door when open.
- Do not use the handle to lift or move the appliance.

Heat production during appliance operation
Risk of fire

- Veneers, adhesives or plastic coatings on adjacent furniture should be temperature-resistant (not less than 90°C).

Dimensions

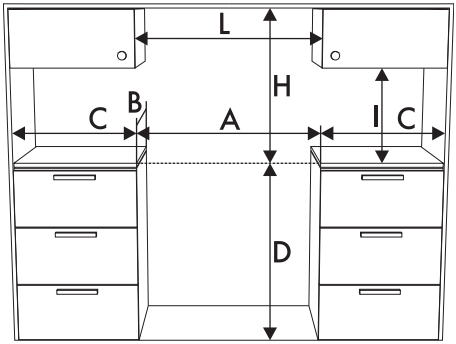

A	900 mm
B	600 mm
C[1]	450 mm
D	900 mm
H	750 mm
I	450 mm
L[2]	900 mm

[1] Minimum distance from side walls or other flammable material.

[2] Minimum cabinet width (=A).

Appliance dimensions

Position of gas and electrical connections.

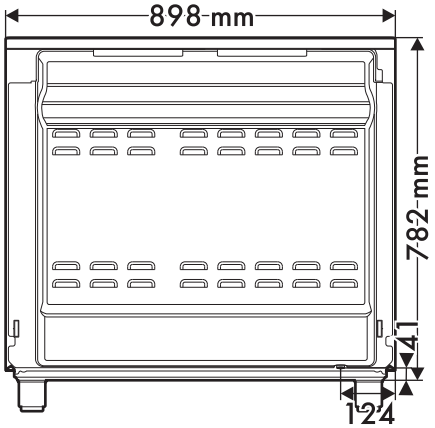

General information

This appliance may be installed next to walls, one of which must be higher than the worktop, at a minimum distance of 50 mm from the side of the appliance, as shown in figures A and B relative to the installation classes.

Any wall units positioned above the worktop must be at a minimum distance of at least 750 mm. If a hood is installed above the hob, refer to the hood instruction manual to ensure the correct clearance is left.

Depending on the type of installation, this appliance belongs to classes:

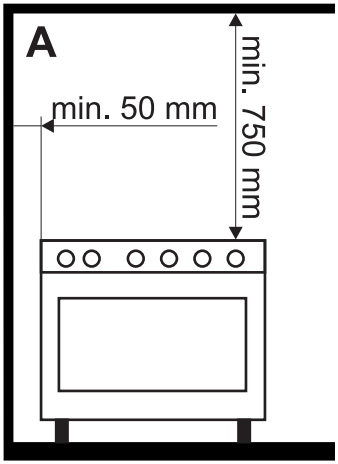

A - Class 1

(Free-standing appliance)

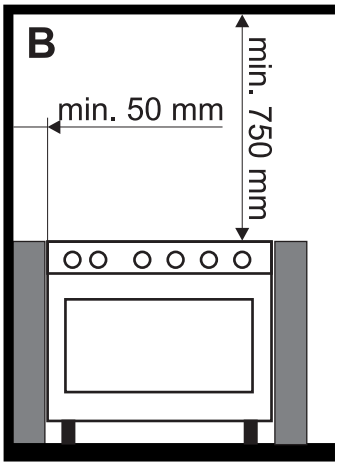

B - Class 2 subclass 1

(Built-in appliance)

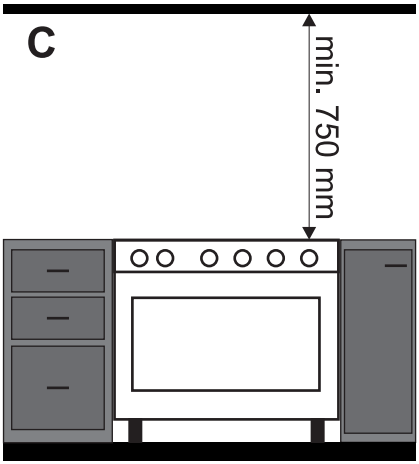

C - Class 2 subclass 1

(Built-in appliance)

The appliance must be installed by a qualified technician and according to the regulations in force.

Positioning and levelling

Heavy appliance
Risk of damage to the appliance

- Insert the front feet first and then the rear ones.

- After making the gas and electrical connections, screw on the four feet supplied with the appliance.

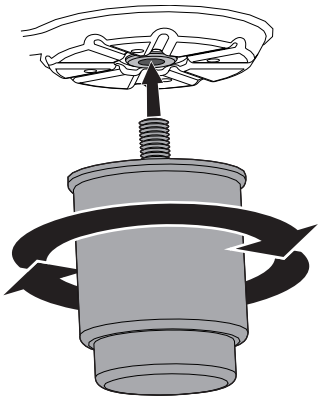

The appliance must sit level on the floor to ensure stability.

- Screw or unscrew the bottom part of the foot until the appliance is stable and level on the floor.

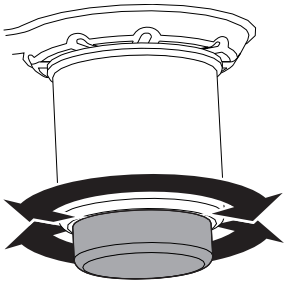

EN

Fastening to the wall

The anti-tip devices must be installed in order to prevent the appliance from tipping over.

1. Screw the wall fastening plate to the rear of the appliance.

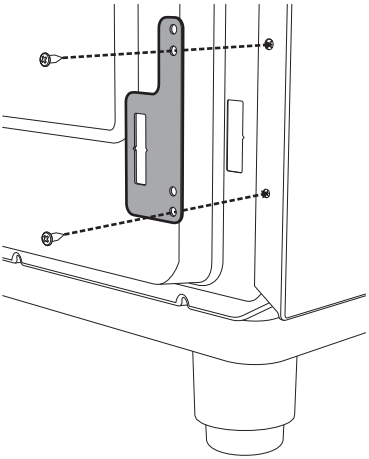

2. Adjust the height of the 4 feet.

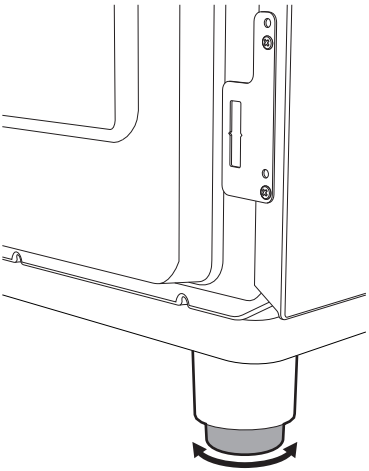

3. Assemble the fastening bracket.

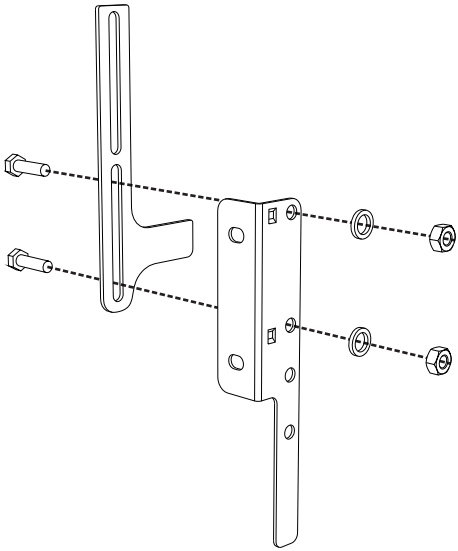

4. Align the base of the hook on the fastening bracket with the base of the slot on the wall fastening plate.

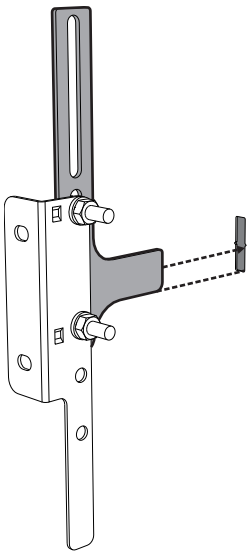

5. Align the base of the fastening bracket with the ground and tighten the screws to fix the measurements.

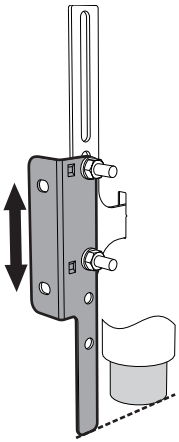

6. Use 50 mm for the distance from the side of the appliance to the bracket holes.

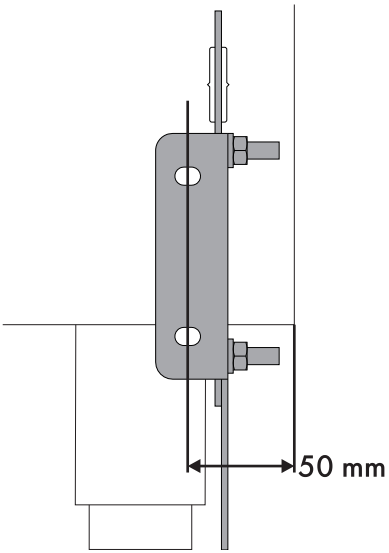

7. Move the bracket onto the wall and mark the position of the holes to be drilled in the wall.

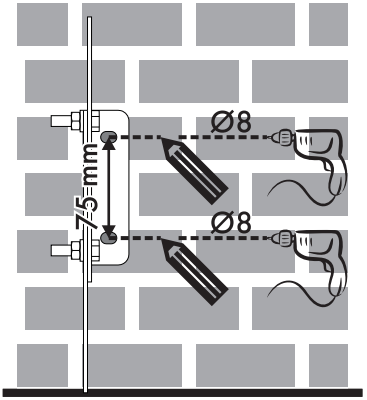

8. After drilling the holes in the wall, use wall plugs and screws to fasten the bracket to the wall.
9. Push the cooker towards the wall, and at the same time, insert the bracket in the plate fastened to the rear of the appliance.

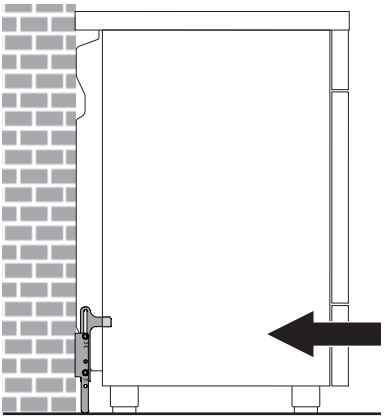

Fastening to the ground

If fastening to the ground, contact the nearest Authorised Service Centre

Installing the front plinth

The front plinth must always be positioned and secured correctly on the appliance.

1. Use a screwdriver to remove the front screws underneath the storage compartment.

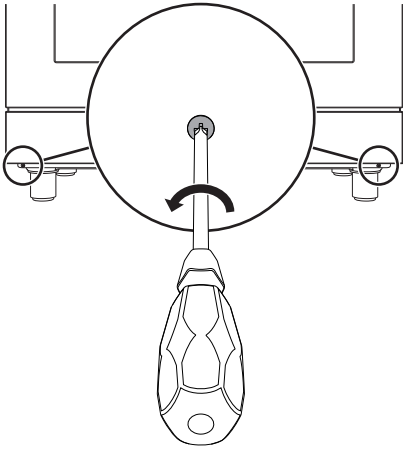

2. Position the front plinth at the bottom of the appliance and line up the side holes of the front plinth with the holes on the base of the appliance.

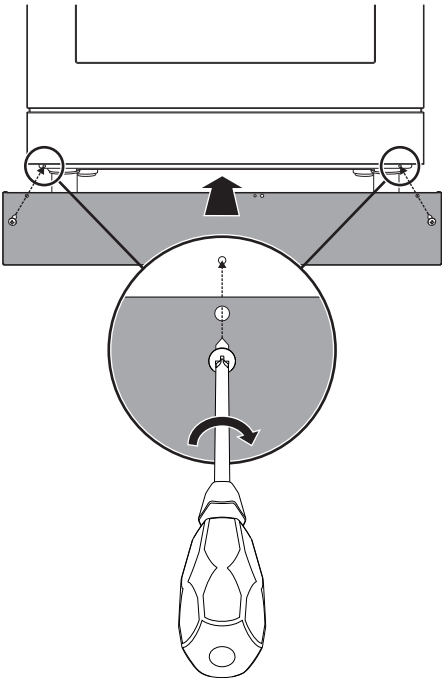

3. Fasten the front plinth to the appliance using the previously removed screws.

Installing the side plinths

After installing the front plinth, the side plinth can be fastened correctly to the appliance.

1. Use a screwdriver to remove the front screws underneath the storage compartment.

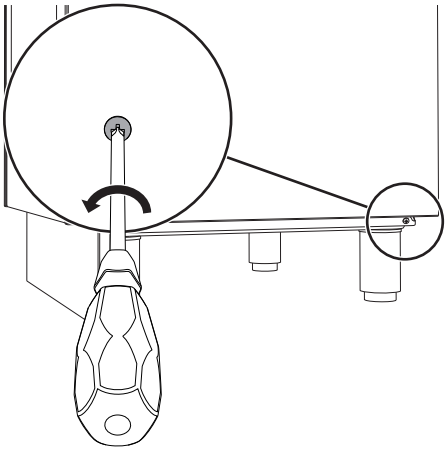

2. Position the side plinth on the lower side section of the appliance below the storage compartment.

3. Insert the tabs on the side plinth into the slots on the rear part of the front plinth.

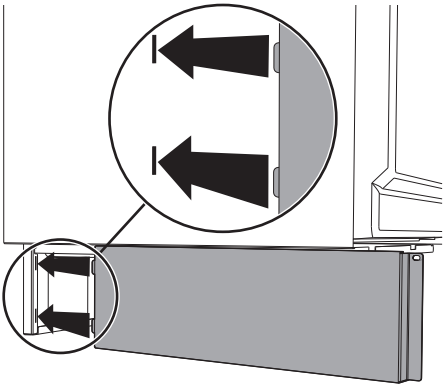

4. Line up the hole on the side plinth with the rear hole on the base of the appliance.

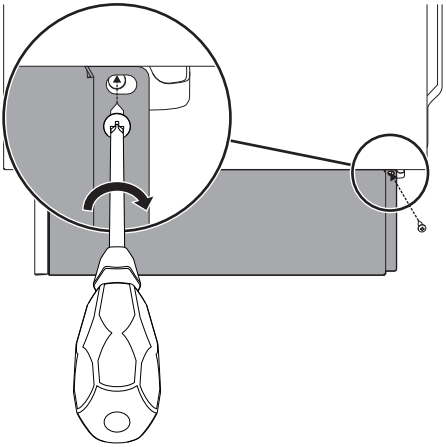

5. Fasten the side plinth to the appliance using the previously removed screw.
6. Repeat the operations described above for the other side plinth section.

Assembling the upstand

The supplied upstand is an integral part of the product and it is recommended to fasten it to the appliance prior to installation.

The upstand must always be positioned and secured correctly on the appliance.

1. Loosen the 4 screws (**A**) on the back of the hob (2 for each side) using a screwdriver.
2. Place the upstand on the hob.
3. Align the slots of the upstand (**B**) with the screws (**A**).

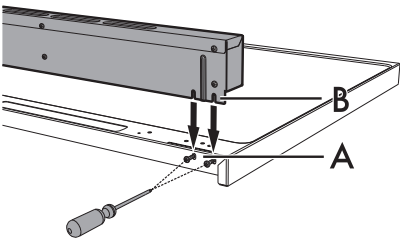

4. Secure the upstand to the hob by tightening the 4 screws previously loosened.

5.2 Electrical connection

Power voltage
Danger of electrocution

- Have the electrical connection performed by authorised technical personnel.
- Use personal protective equipment.
- The appliance must be connected to earth in compliance with electrical system safety standards.
- Disconnect the mains power supply.
- Do not pull the cable to remove the plug.
- Use cables withstanding a temperature of at least 90°C.
- The tightening torque of the screws of the terminal supply wires must be 1.5 - 2 Nm.

General information

Check the grid characteristics against the data indicated on the plate.

The identification plate bearing the technical data, serial number and brand name is visibly positioned on the appliance.

Do not remove this plate for any reason.

Perform the ground connection using a wire that is 20 mm longer than the other wires.

The appliance can work in the following modes:

- 220-240 V 2~

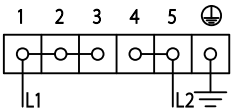

3 x 10 mm² three-core cable.

- 3220-240 V 3~

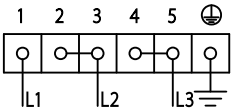

4 x 6 mm² four-core cable.

- 220-240 V 1N~

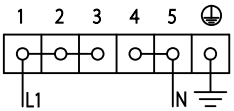

3 x 10 mm² three-core cable.

- 380-415 V 2N~

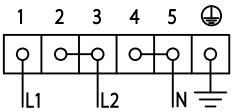

4 x 6 mm² four-core cable.

- 380-415 V 3N~

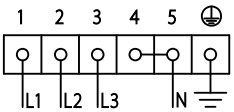

5 x 2.5 mm² five-core cable.

The values indicated refer to the cross-section of the internal conductor.

The aforementioned power cables are sized taking into account the coincidence factor (in compliance with standard EN 60335-2-6).

Replacement U-bolt

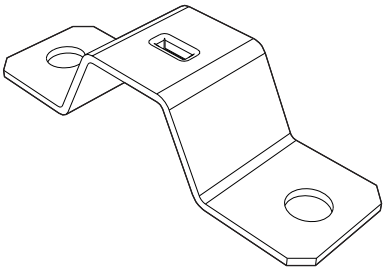

In the event of connection to a two- or three-phase supply, the installed U-bolt must be replaced with the one supplied in order to ensure correct fastening of the cable.

Fixed connection

Fit the power line with an omnipolar circuit breaker in compliance with installation regulations.

The circuit breaker should be located near the appliance and in an easily reachable position.

Connection with plug and socket

Make sure that the plug and socket are of the same type.

Avoid using adapters and shunts as these could cause overheating and a risk of burns.

Accessing the terminal board

To connect the power supply cable, you must access the terminal board on the rear casing:

1. Remove the screws fastening the plate to the rear casing.

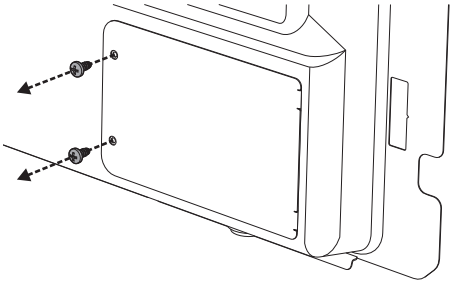

2. Gently rotate the plate and remove it from its seat.

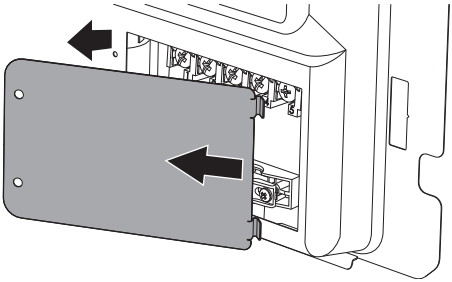

3. Proceed with installation of the power supply cable.

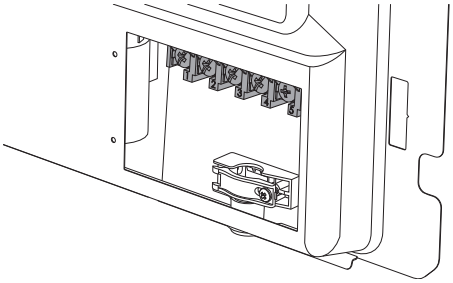

It is recommended to slacken off the cable clamp screw before installing the power supply cable.

4. When finished, replace the plate on the rear casing and secure it in place using the screws that were previously removed.

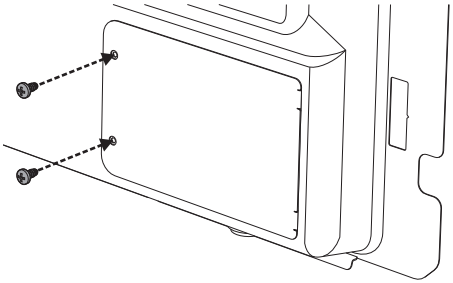

5.3 Instructions for the installer

- The plug must be accessible after installation. Do not bend or trap the power cable.
- The appliance must be installed according to the installation diagrams.
- If the appliance does not work correctly after having carried out all the checks, contact your local Authorised Service Centre.
- Once the appliance has been installed, please explain to the user how to use it correctly.